Parametric Coding of Spatial Audio

Ph.D. Thesis

Christof Faller, September 24, 2004

Thesis advisor: Prof. Martin Vetterli

Audiovisual Communications Laboratory, EPFL Lausanne

Parametric Coding of Spatial Audio

Contents:

- Audio Coding and Thesis Motivation
- Background
- Binaural Cue Coding (BCC)
- Variations of BCC
- Source Localization in Complex Listening Scenarios
- Conclusions

Audio Coding

Audio coding

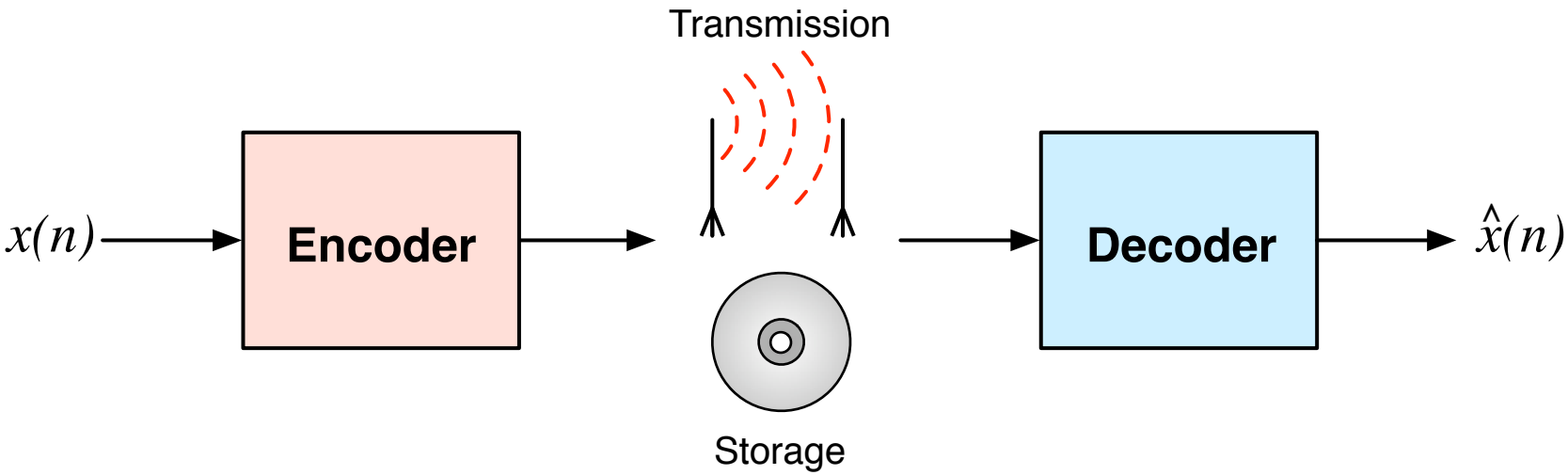

Convert audio signal into a representation suitable for:
- Transmission
- Storage

Minimize bitrate
- Optimal for storage
- Optimal for transmission

Audio Coding

Lossless coding

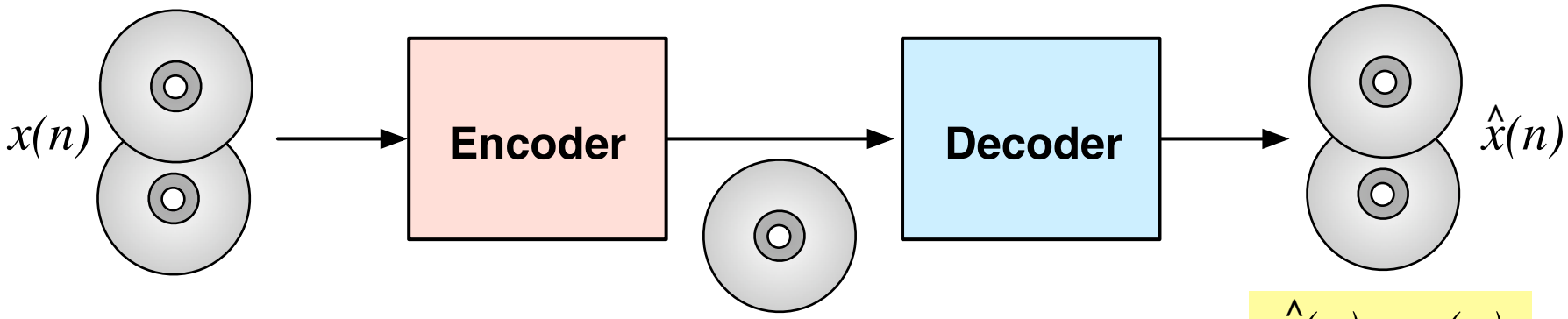

$$\hat{x}(n) = x(n)$$

50% Memory/bitrate reduction
(Put music of 10 CDs on 1 CD)

Redundancy reduction:
- **Time to frequency transform**
- **Entropy coding**

Audio Coding

Perceptual audio coding

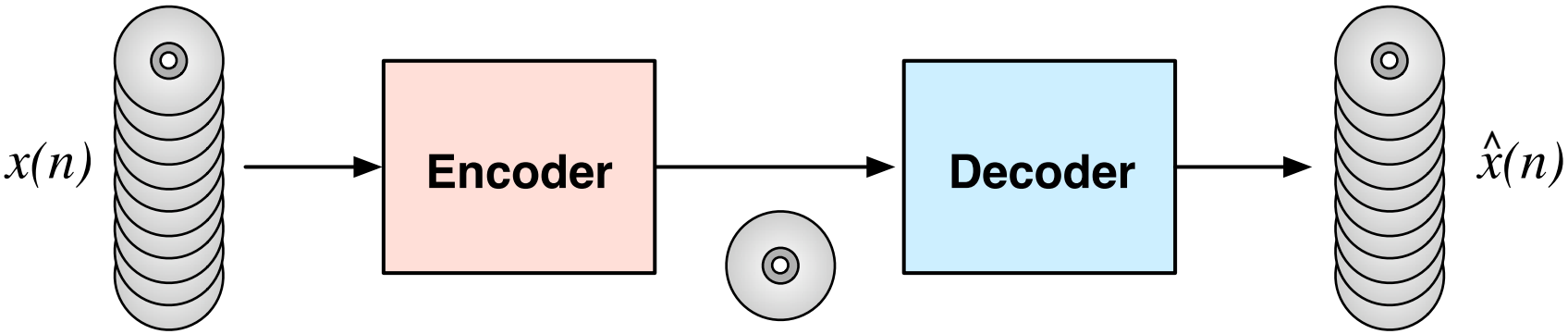

90% Memory/bitrate reduction (Put music of 10 CDs on 1 CD)

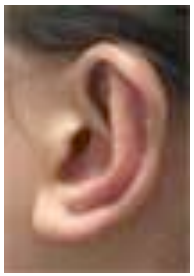

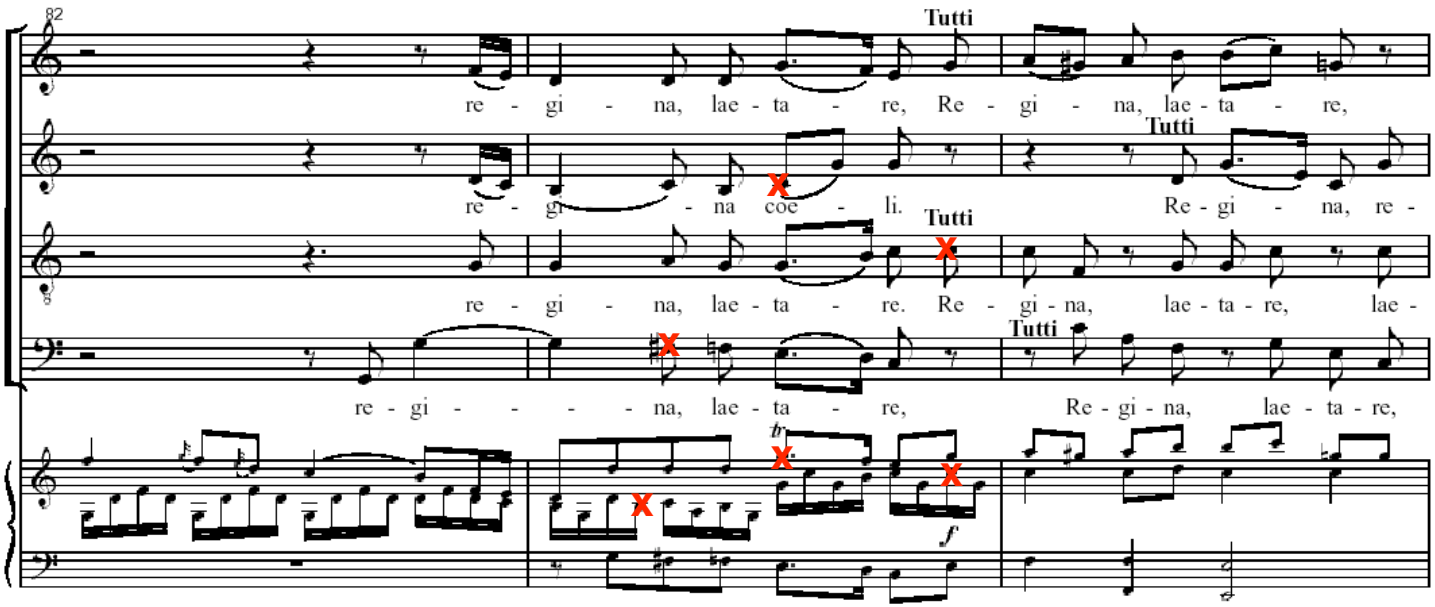

Audio Coding

Parametric audio coding

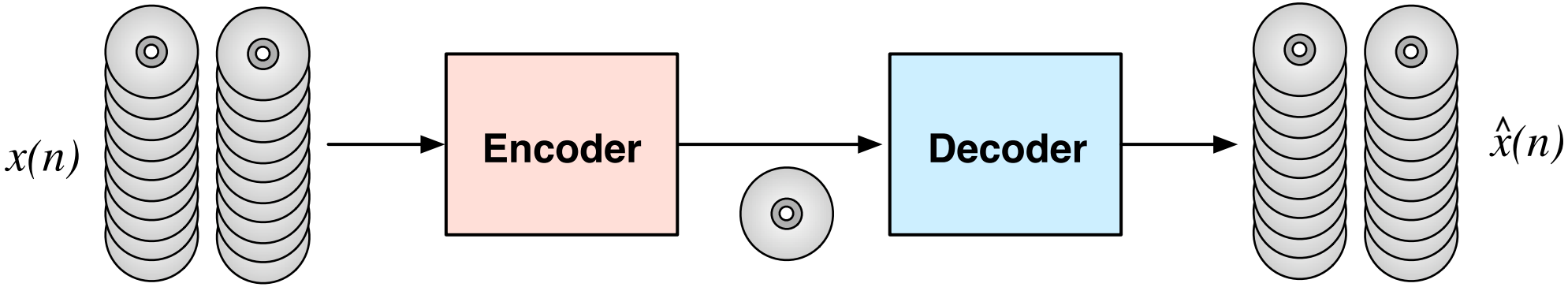

>90% Memory/bitrate reduction

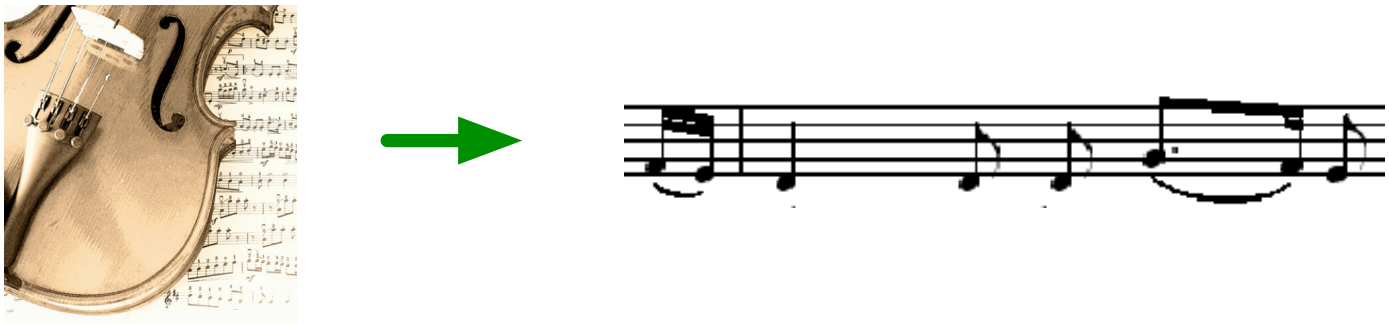

Drawback: Quality loss

Thesis Motivation

Receiver properties...

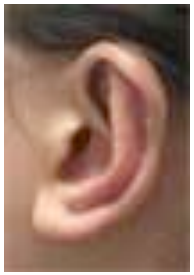

...and source properties...

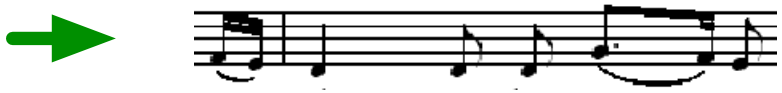

...have been extensively considered in audio coding for monaural audio signals.

This thesis: Extensively consider receiver and source properties for stereo and multi-channel audio signals.

Parametric Coding of Spatial Audio

Contents:

- Audio Coding and Thesis Motivation
- **Background**
- Binaural Cue Coding (BCC)
- Variations of BCC
- Source Localization in Complex Listening Scenarios
- Conclusions

Background

Spatial audio playback

Two-channel stereo
(headphone and loudspeaker playback)

5.1 Surround

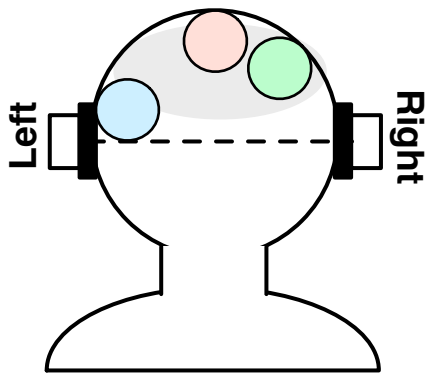

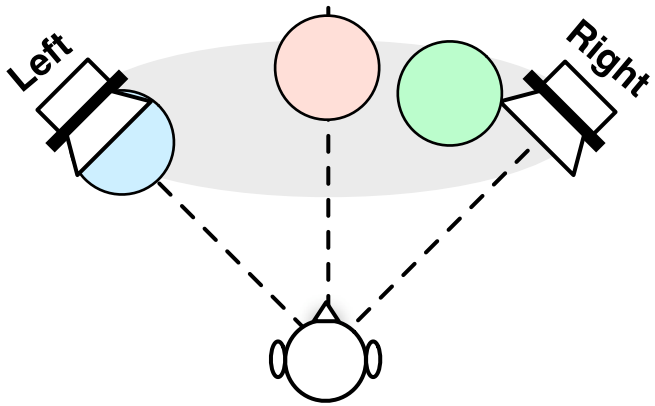

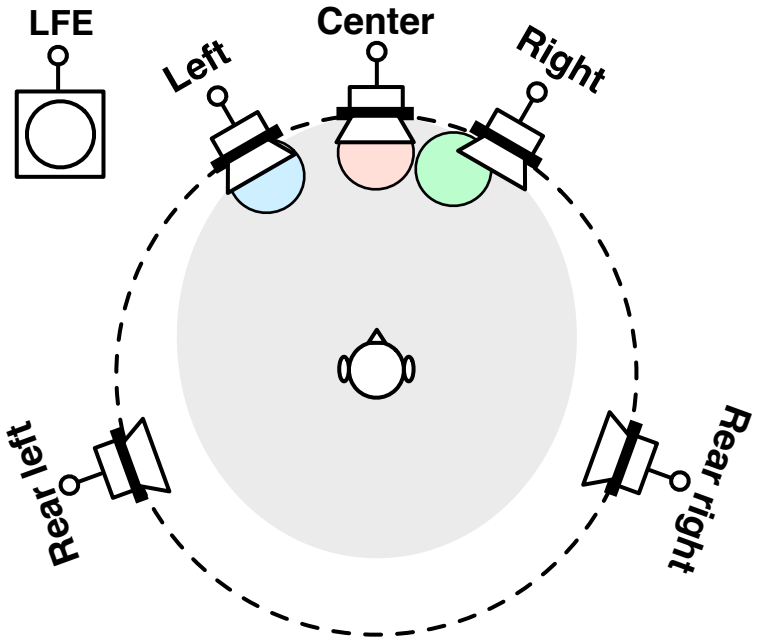

Spatial audio playback:
- perception of an auditory spatial image

Background

Interaural differences

One source, free-field

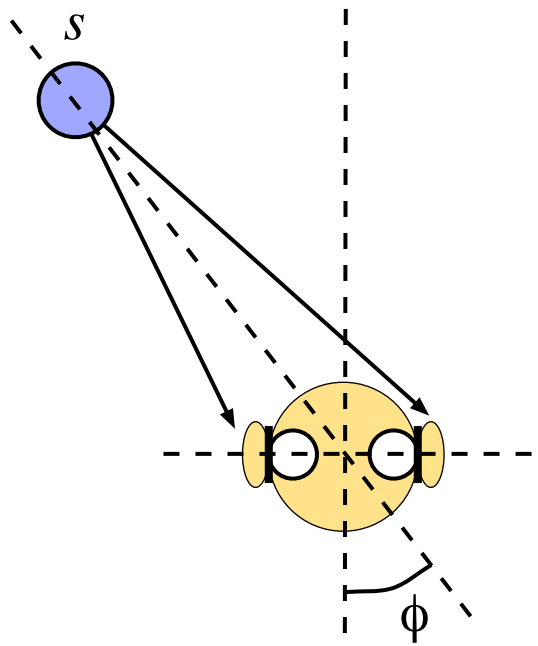

Source azimuth and ITD/ILD:
(Narrowband signal)

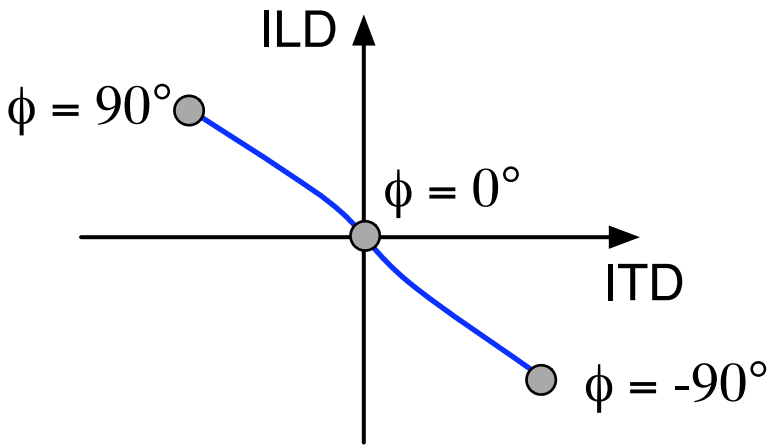

→ distance difference,
head shadowing

→ interaural time and level difference
(**ITD and ILD**)

Background

Inter-channel differences:

Inter-channel time-difference (**ICTD**)
Inter-channel level-difference (**ICLD**)
Inter-channel coherence (**ICC**)

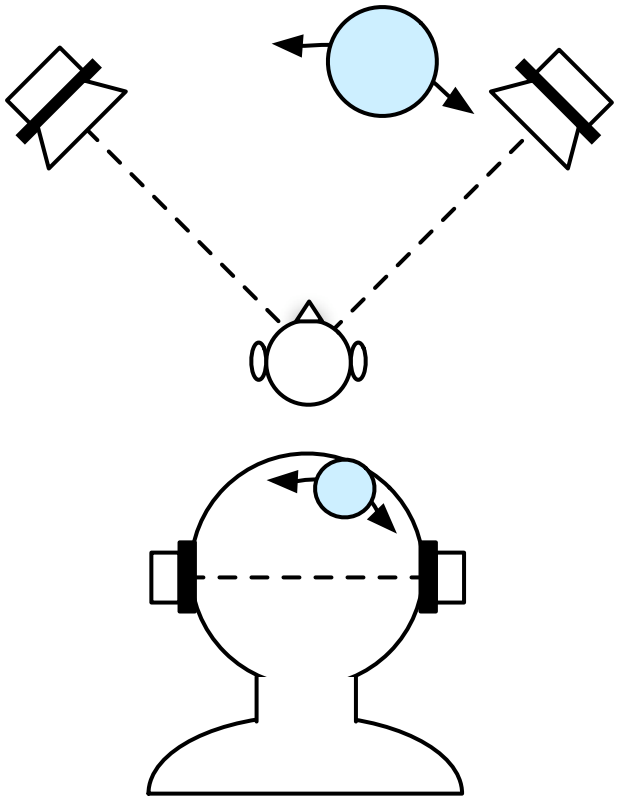

ICTD, ICLD

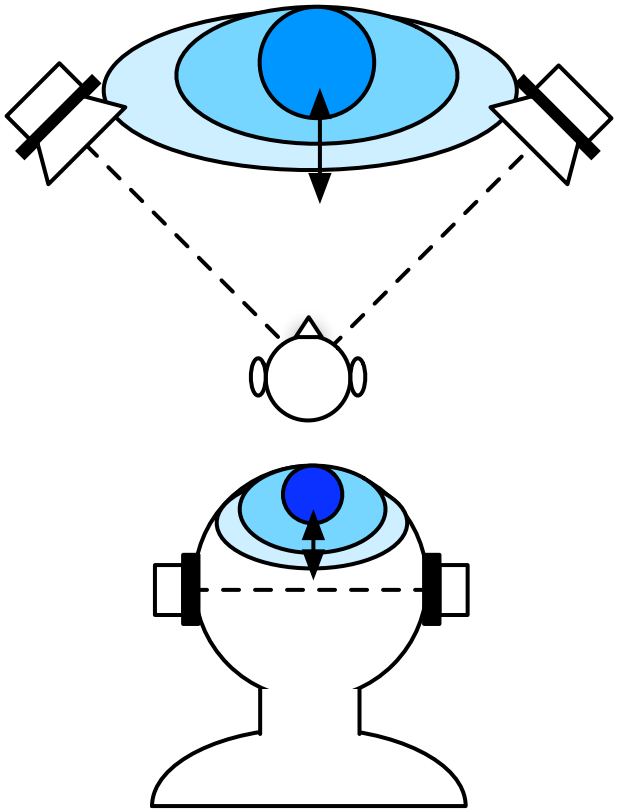

ICC

Background

Mixing stereo signals:

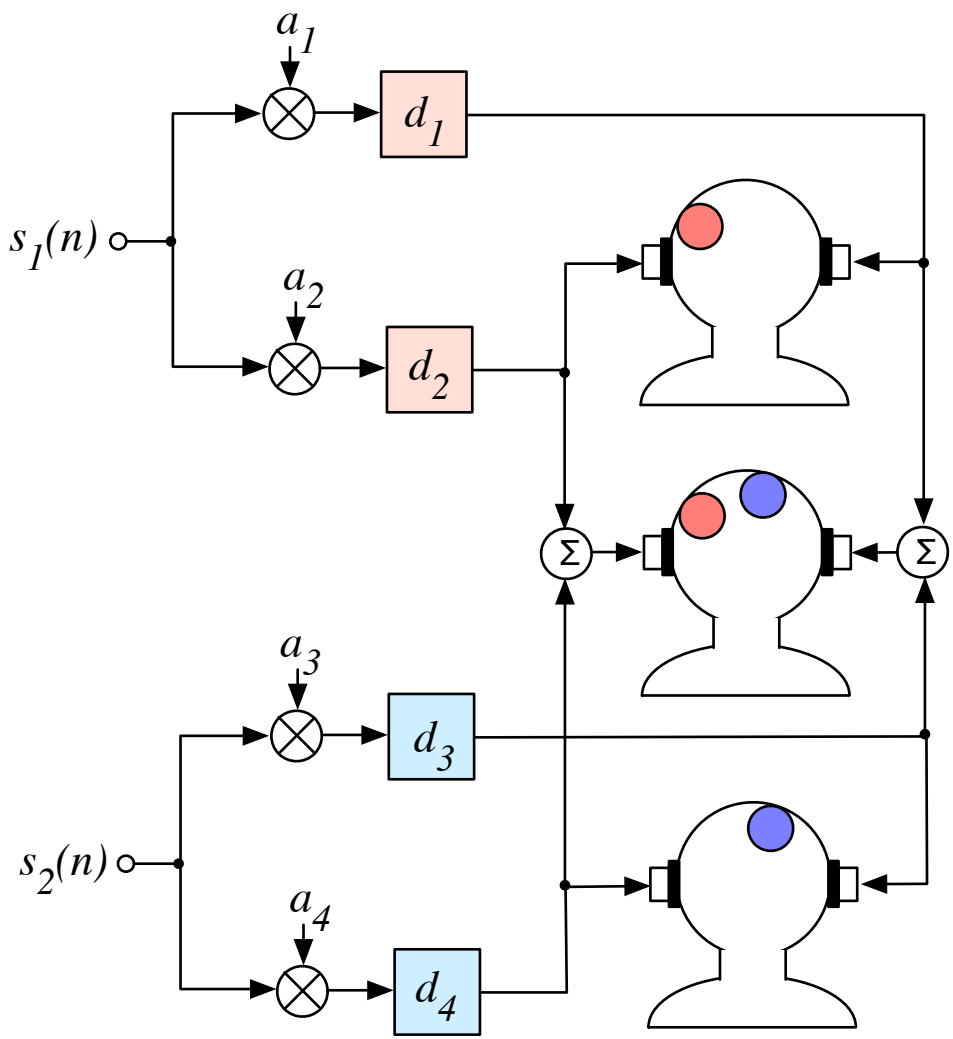

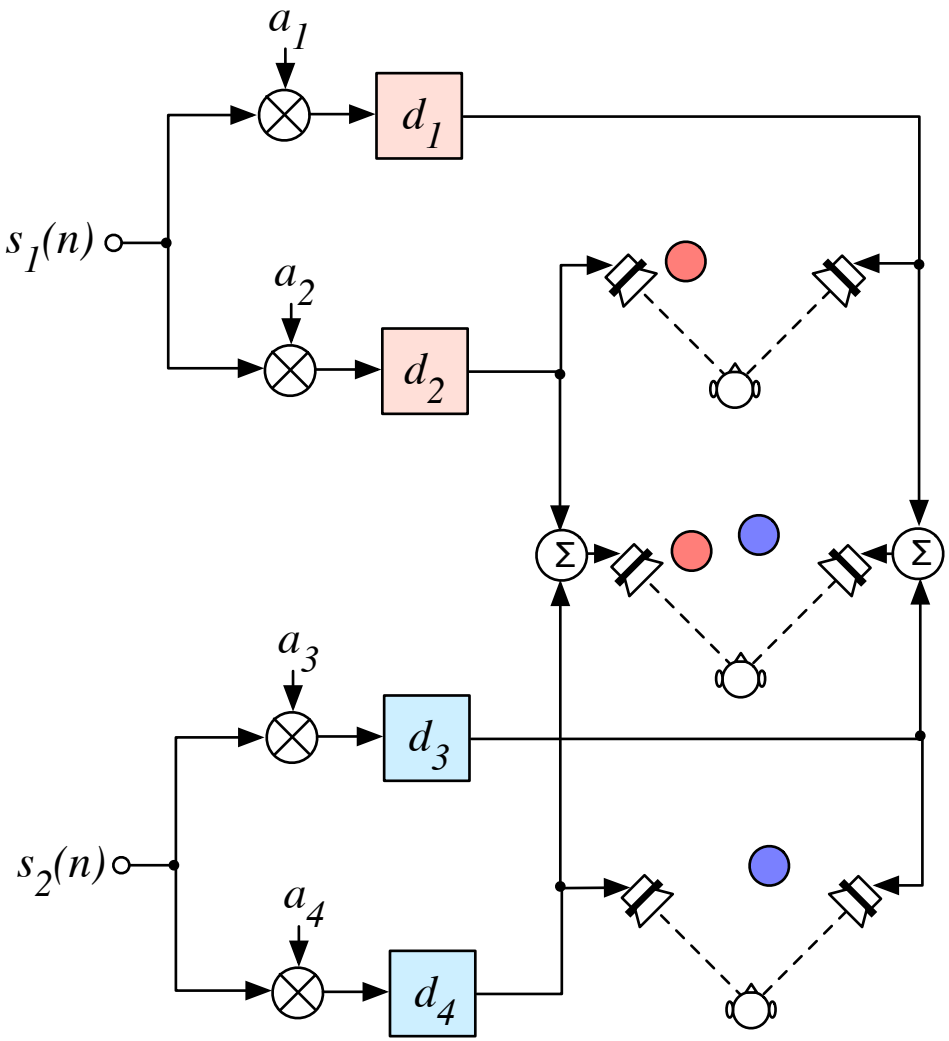

Background

Other auditory spatial image attributes:

Auditory event distance

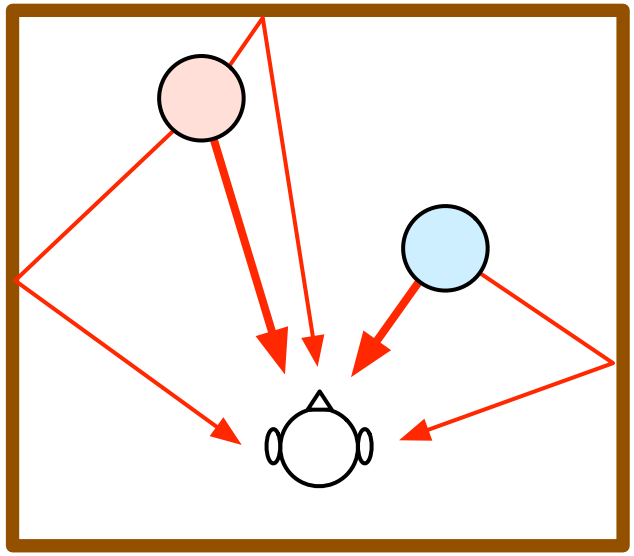

- Power of ear-input signals
- Ratio of power of direct to reflected sound

Auditory event width

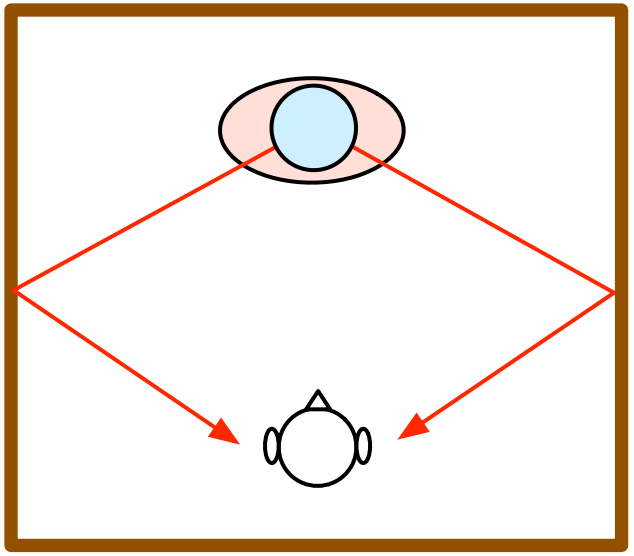

- Lateral fraction

Listener envelopment

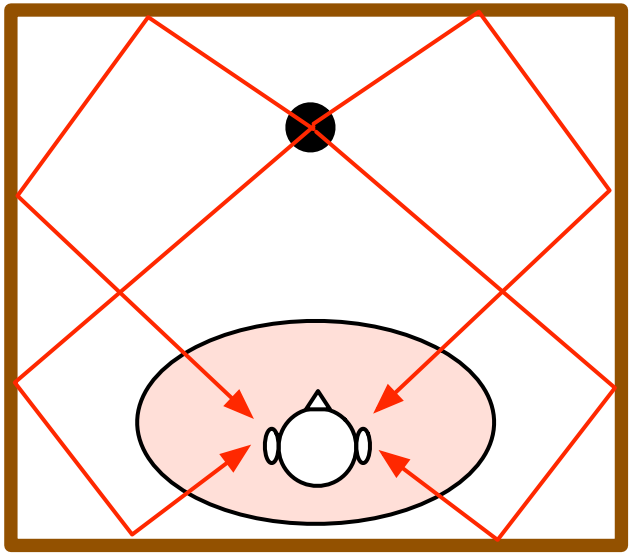

- Late lateral energy fraction

Spatial audio playback:

These attributes are controlled by adding reflections to the signal channels.

Parametric Coding of Spatial Audio

Contents:

- Audio Coding and Thesis Motivation
- Background
- **Binaural Cue Coding (BCC)**
- Variations of BCC
- Source Localization in Complex Listening Scenarios
- Conclusions

Binaural Cue Coding (BCC)

Conventional multi-channel transmission

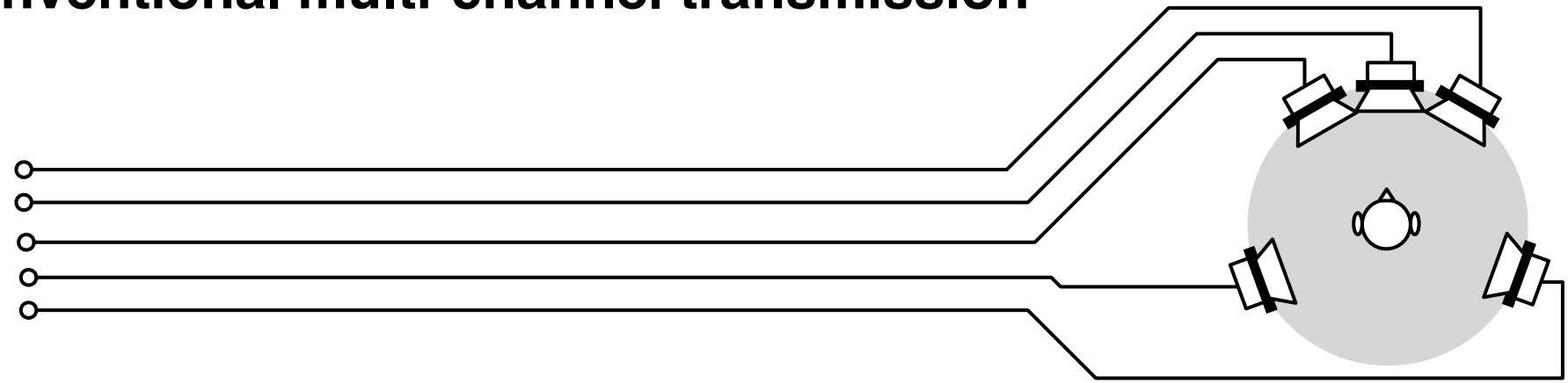

Proposed multi-channel transmission

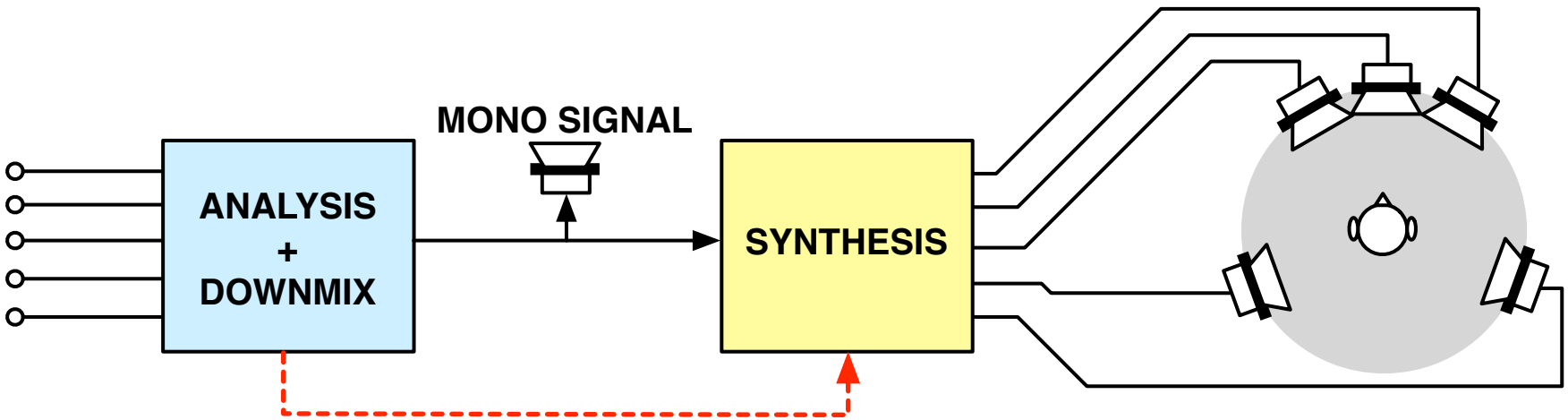

Binaural Cue Coding (BCC)

Estimation of inter-channel cues: ICTD, ICLD, and ICC

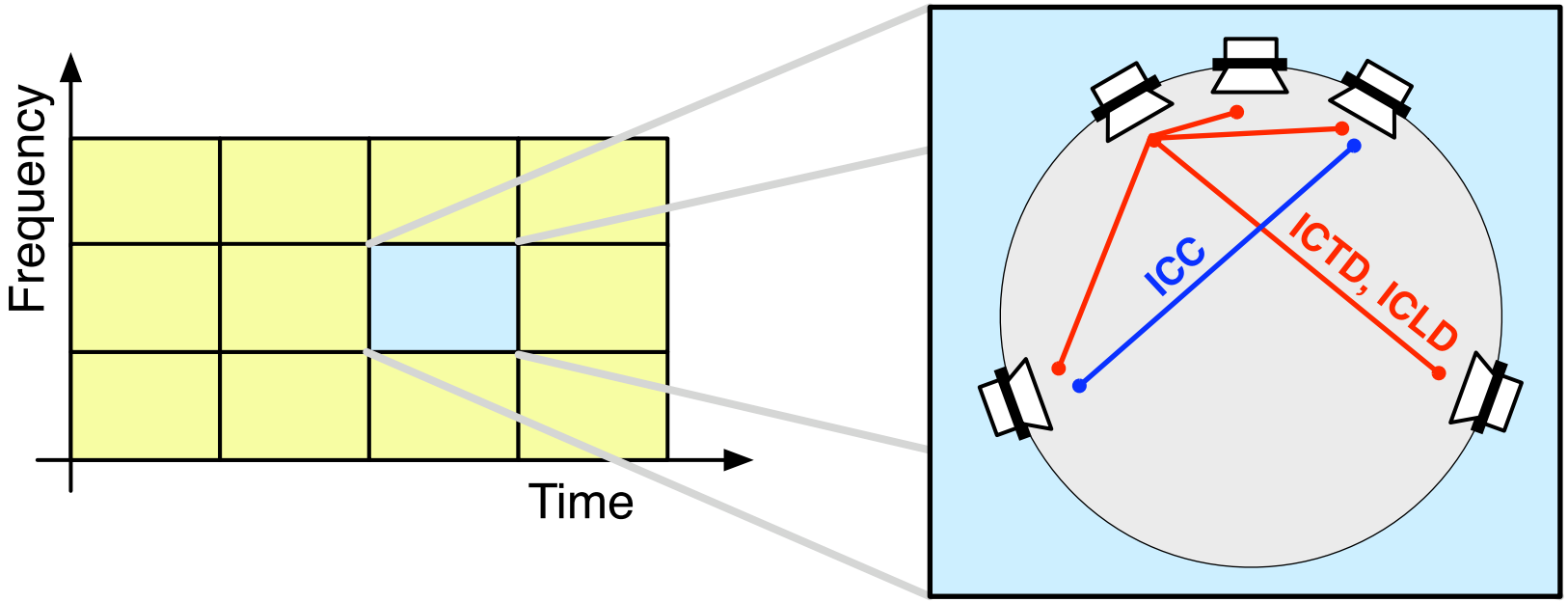

ICTD/ICLD:

1-3 kb/s (per channel pair)

ICC:

1-3 kb/s

Binaural Cue Coding (BCC)

ICTD/ICLD/ICC synthesis

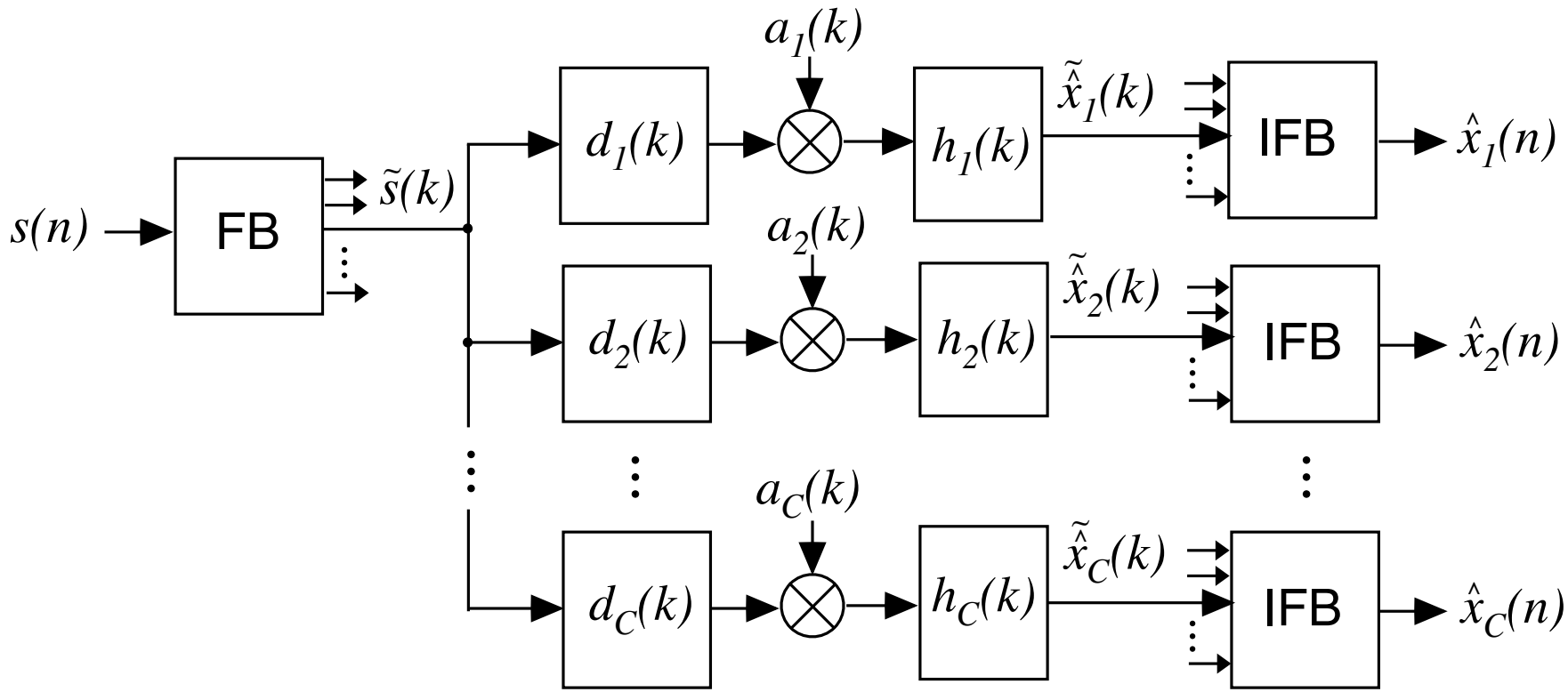

d_i : delays

a_i : scale factors

h_i : filters

$\underline{h_i}$:

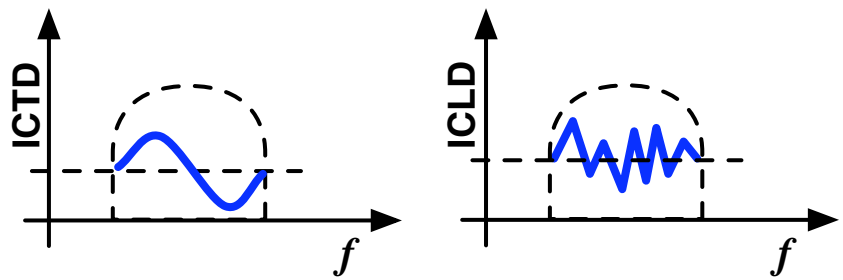

Binaural Cue Coding (BCC)

ICTD, ICLD, and ICC and auditory spatial image attributes

Auditory event localization:

ICTD, ICLD

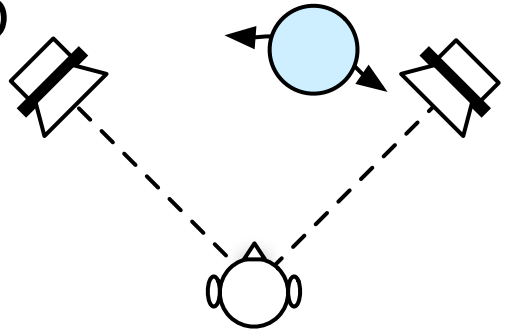

Effect of early reflections:
(auditory event width, coloration)

ICC (de-correlation)
ICLD (comb filter)

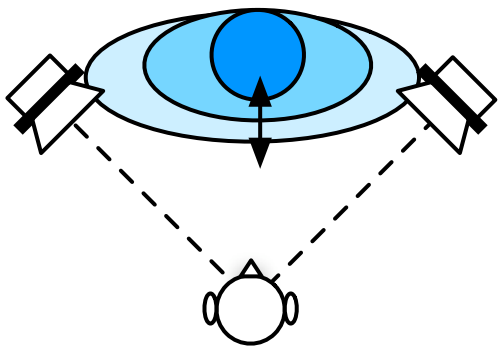

Effect of late reflections:
(ambience, listener envelopment, auditory event distance)

ICC (de-correlation)
ICLD (reverberation decay)

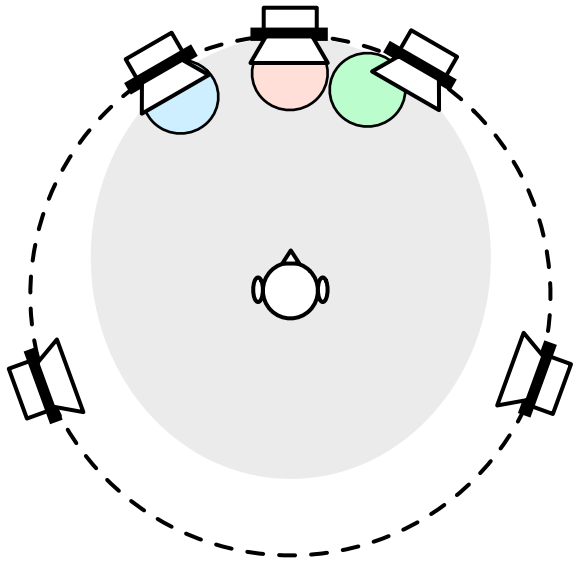

Binaural Cue Coding (BCC)

Subjective evaluation: Stereo audio quality

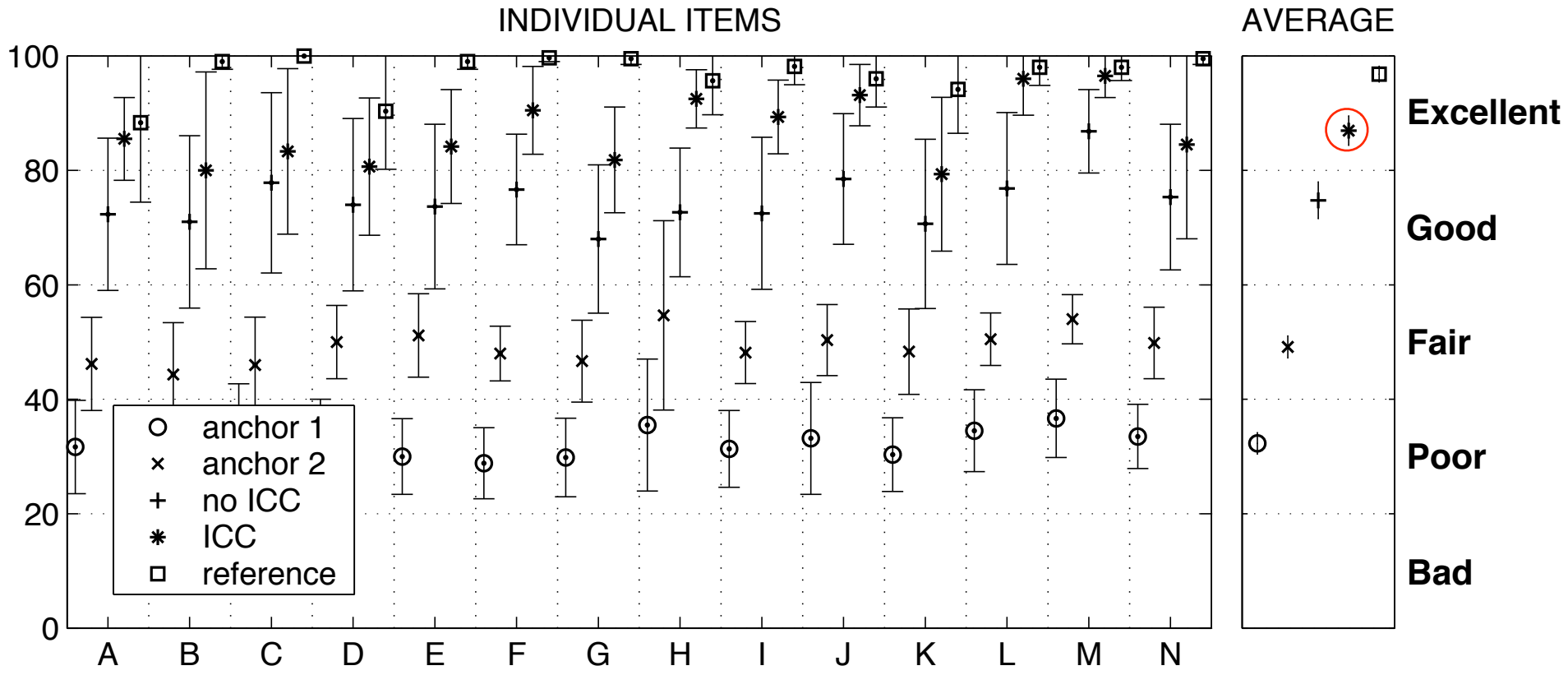

MUSHRA (ITU-R BS.1534), headphone listening, 7 experienced subjects

BCC: "excellent"

Binaural Cue Coding (BCC)

Surround 5.1 Demo:

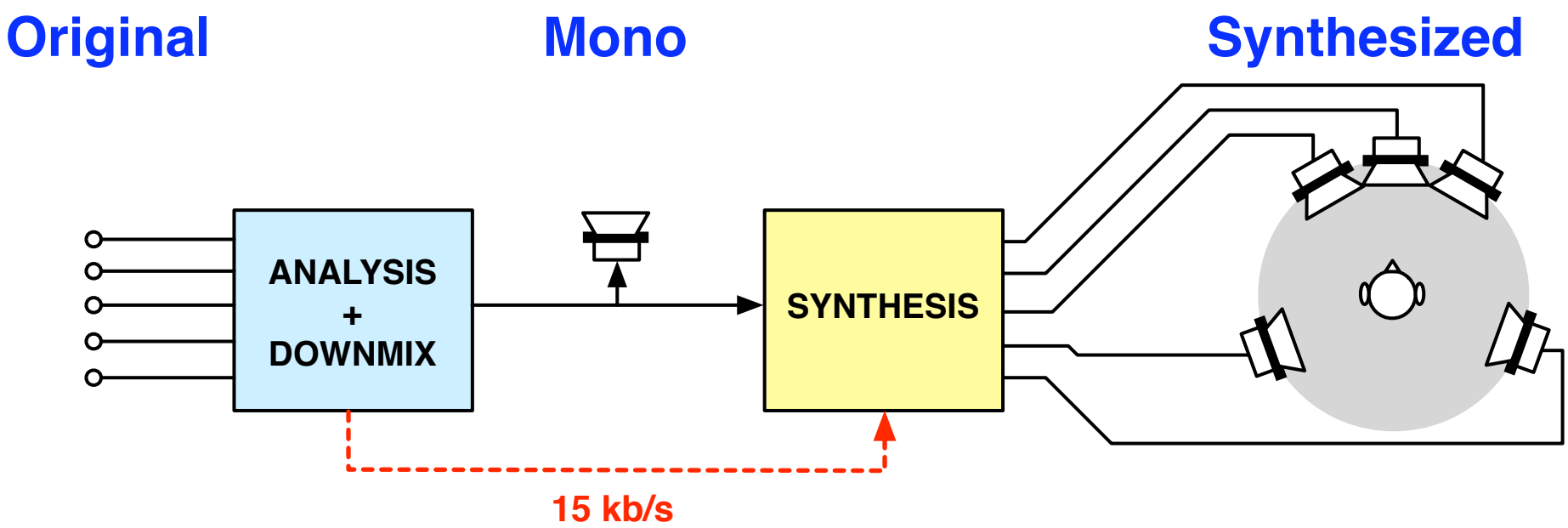

Binaural Cue Coding (BCC)

Surround 5.1 Demo:

44 kb/s
(lowest bitrate ever demonstrated)

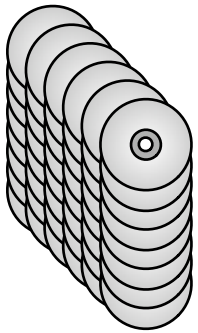

Memory of 1 CD
=
32 CDs worth of music!
Not stereo, but surround!

Original **Synthesized**

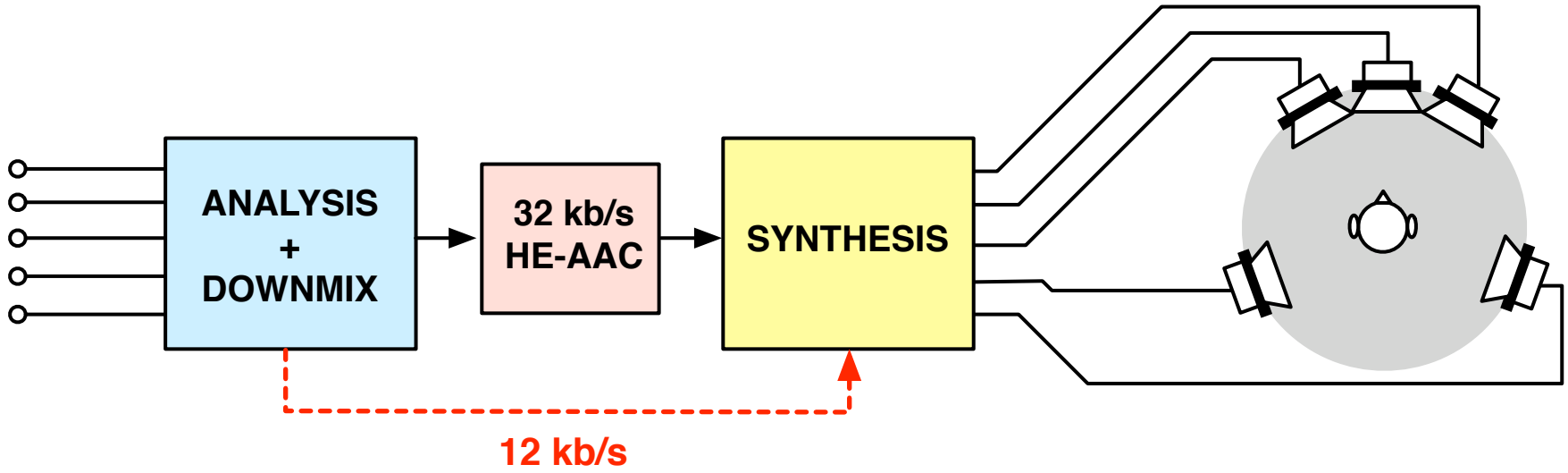

Parametric Coding of Spatial Audio

Contents:

- Audio Coding and Thesis Motivation
- Background
- Binaural Cue Coding (BCC)
- **Variations of BCC**
- Source Localization in Complex Listening Scenarios
- Conclusions

Variations of BCC

"MP3 Surround": Stereo backwards compatible coding of 5.1

Stereo-downmix:

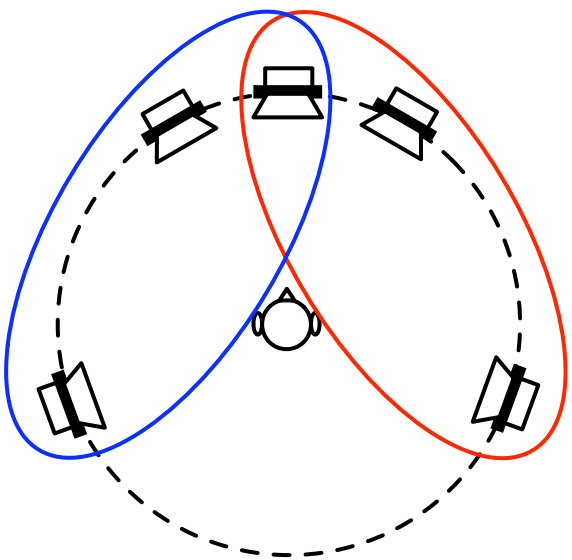

Lt = L + 0.7C + sL
Rt = R + 0.7C + sR

2-to-5 Synthesis:

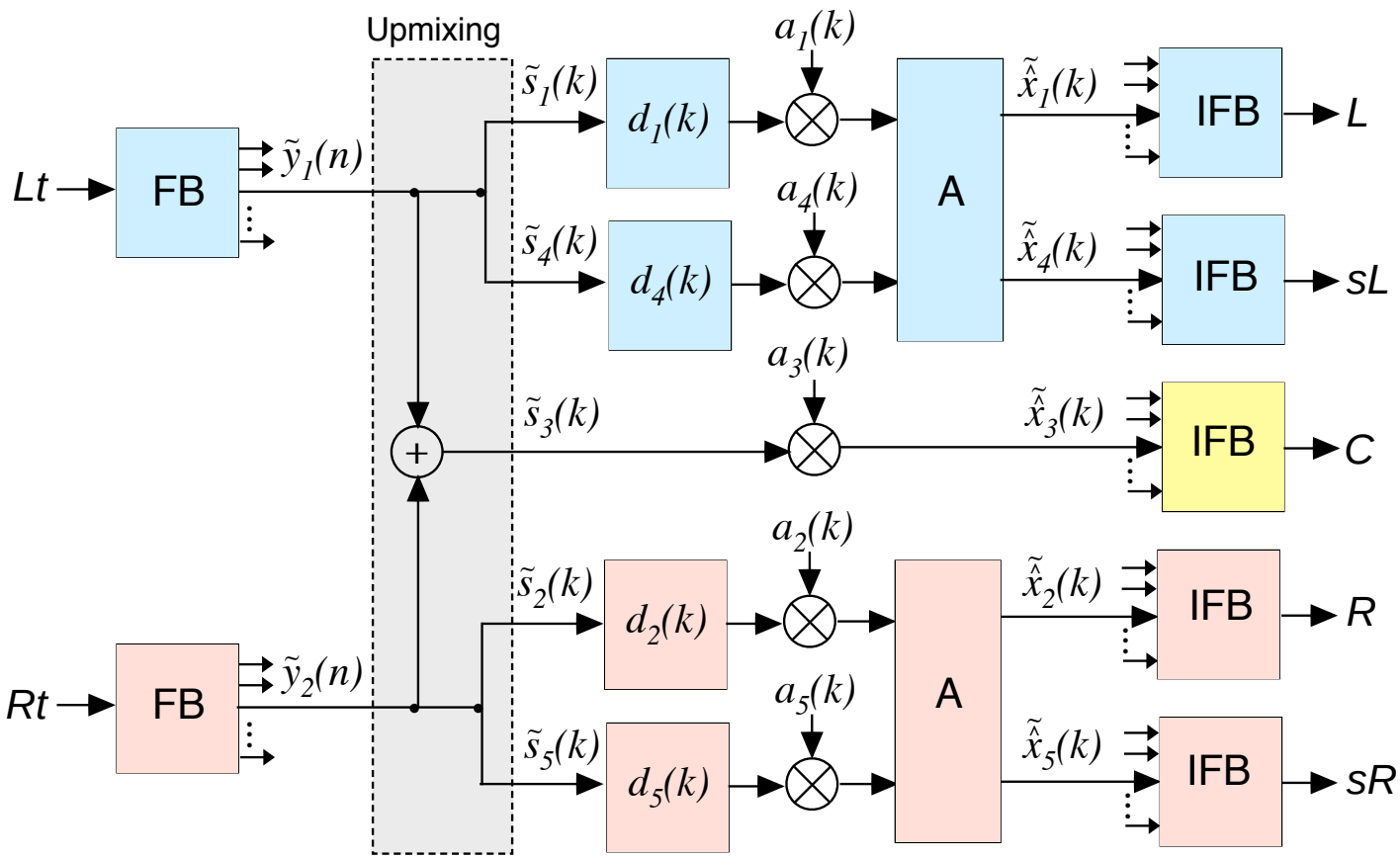

Variations of BCC

Low complexity **5-to-2 BCC:** Subjective evaluation:
MUSHRA (ITU-R BS.1534)

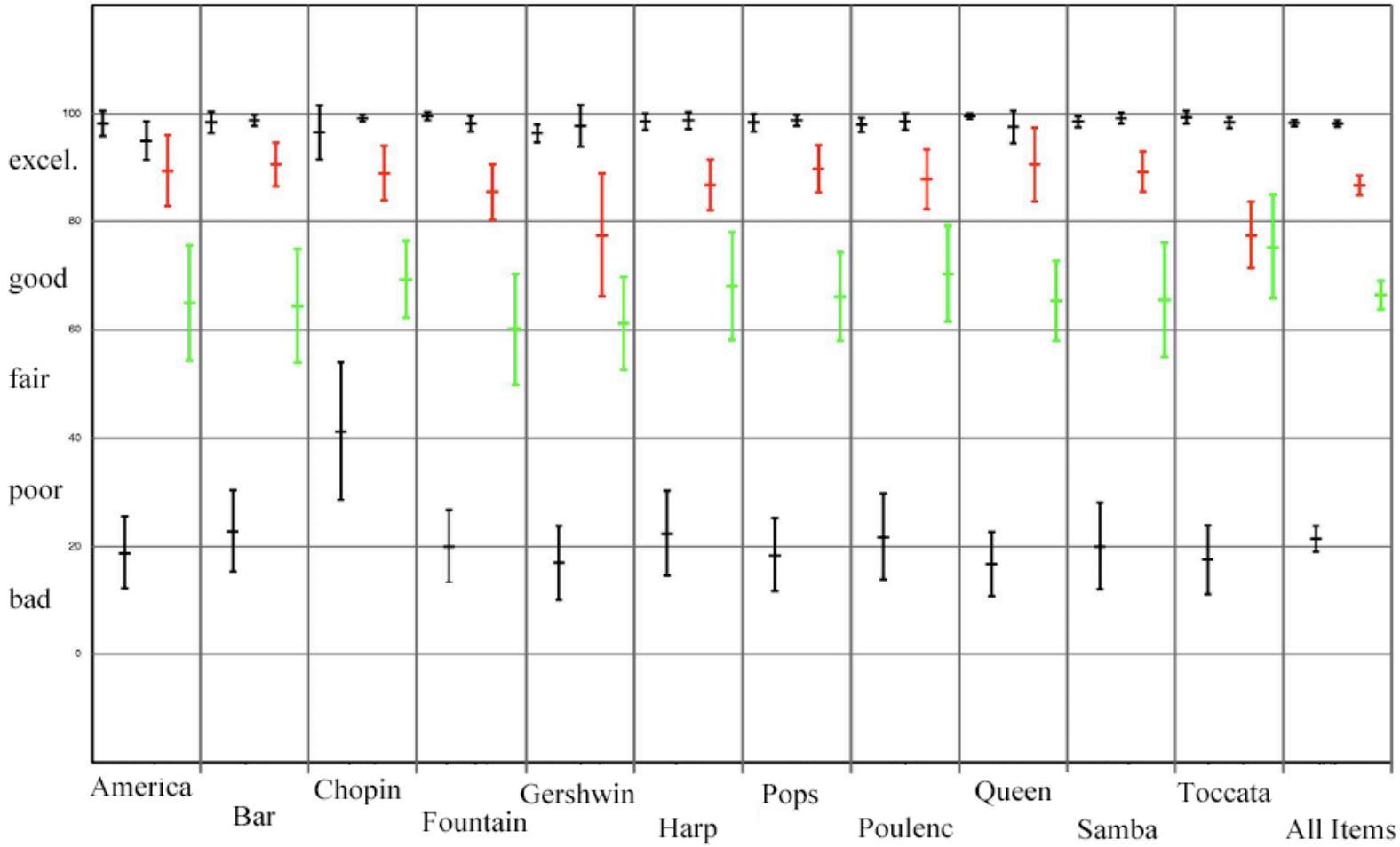

Hidden reference, Anchor, AAC, 5-to-2 BCC + MP3, Dolby Prologic II

256 kb/s **192 kb/s** **PCM**

Variations of BCC

MP3 Surround Demo:

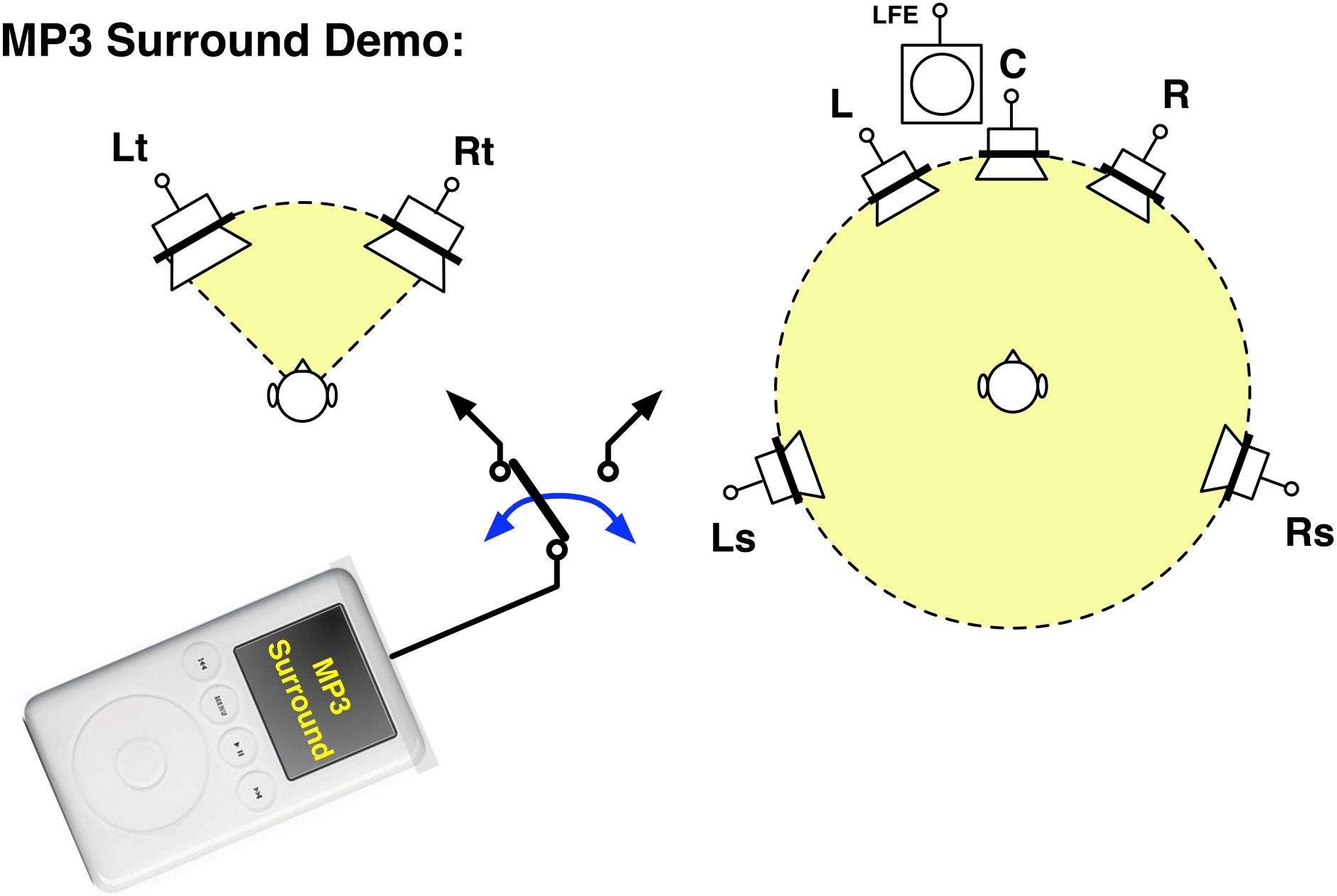

Variations of BCC

Conventional flexible rendering

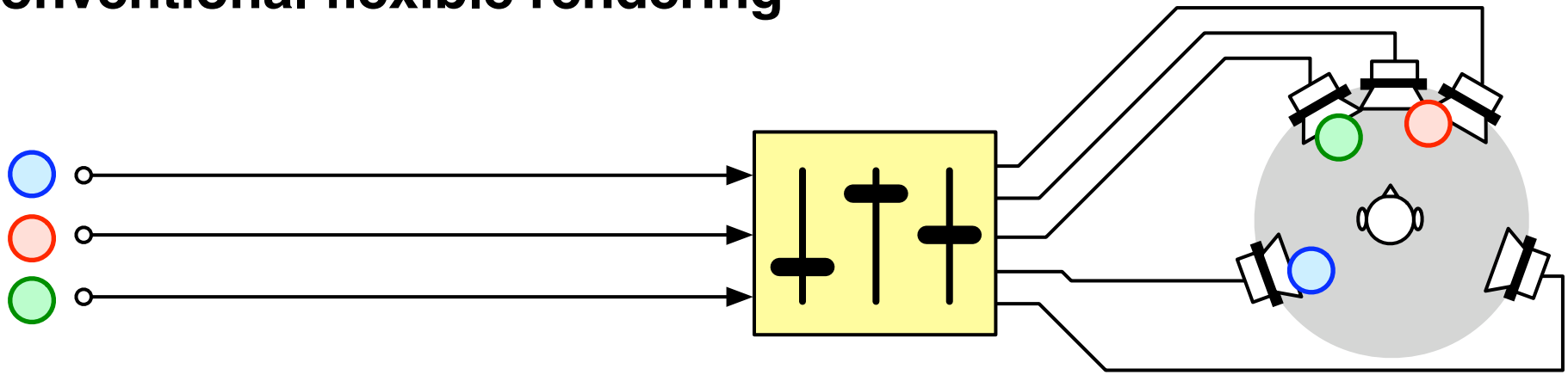

BCC for flexible rendering

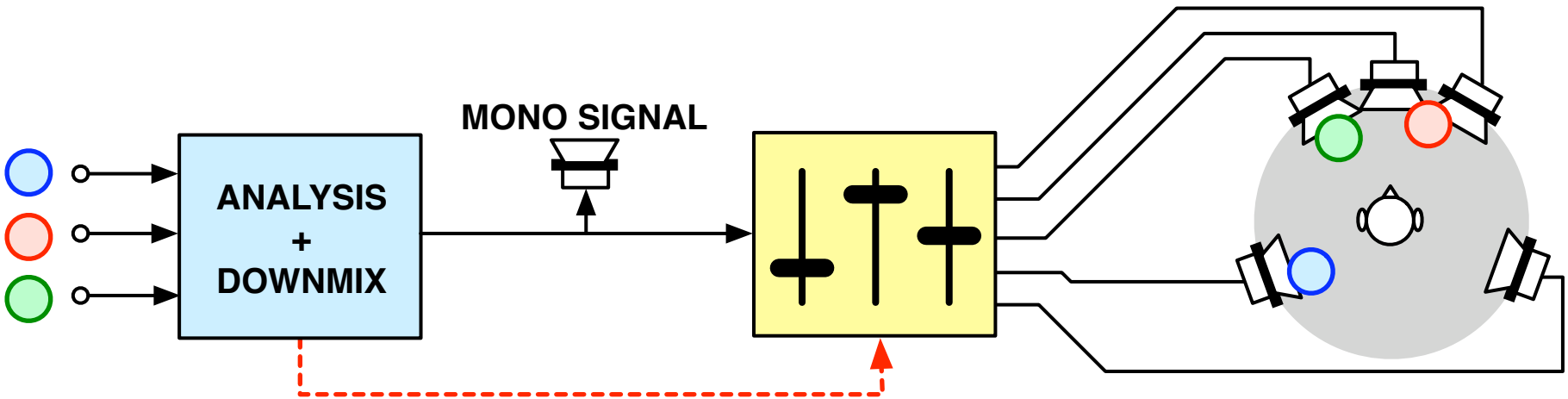

Variations of BCC

BCC for Flexible Rendering

Side information:
Time-frequency structure of sum signal

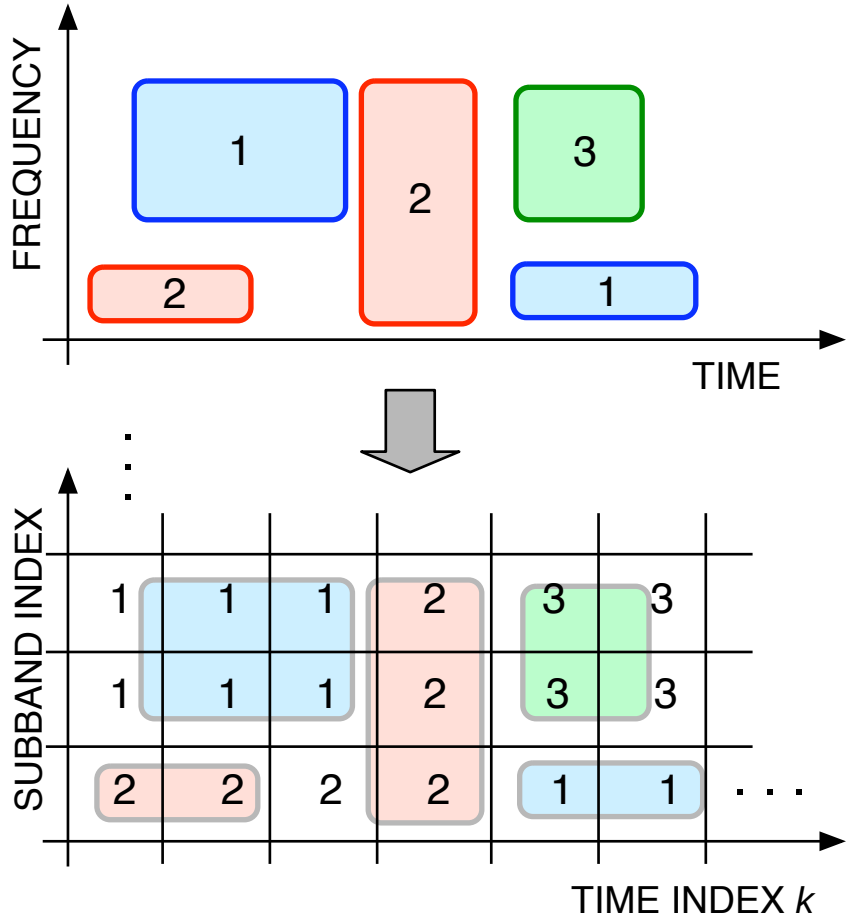

Binaural Cue Coding (BCC)

BCC for Flexible Rendering Demo:

4 Instruments playing together.

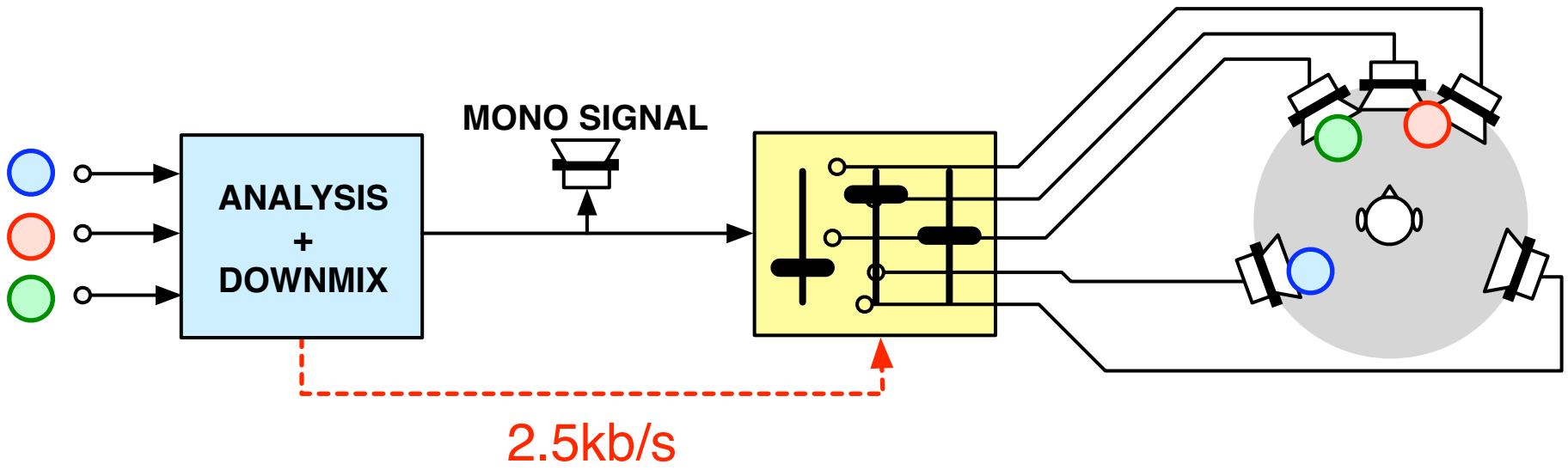

Parametric Coding of Spatial Audio

Contents:

- Audio Coding and Thesis Motivation
- Background
- Binaural Cue Coding (BCC)
- Variations of BCC
- **Source Localization in Complex Listening Scenarios**
- Conclusions

Source Localization in Complex Listening Scenarios

Model for source localization in complex listening scenarios:

- concurrently active sources
- direct and reflected sound

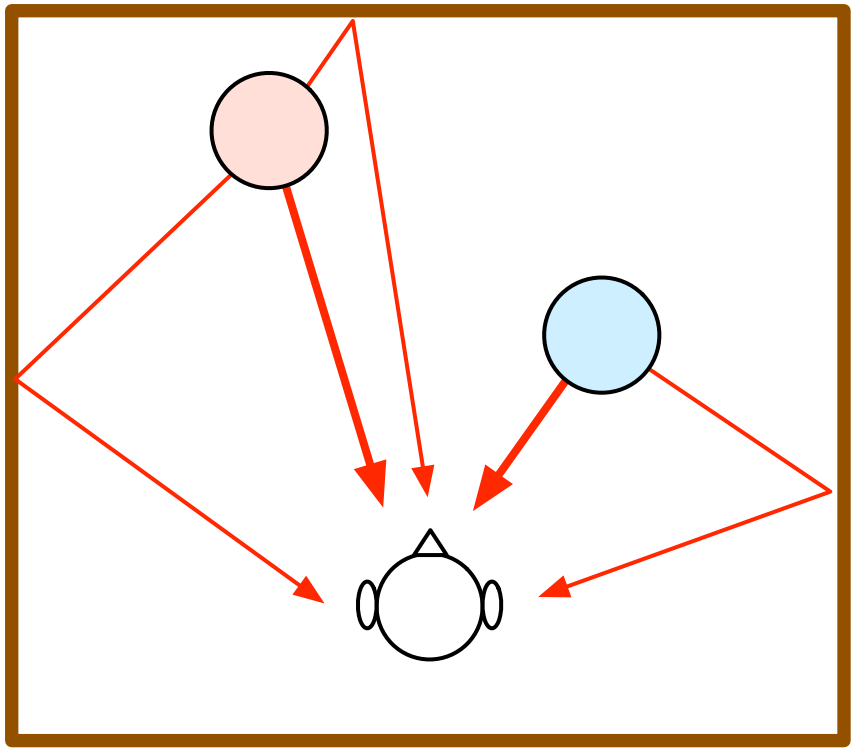

Source Localization in Complex Listening Scenarios

IC and concurrent sources

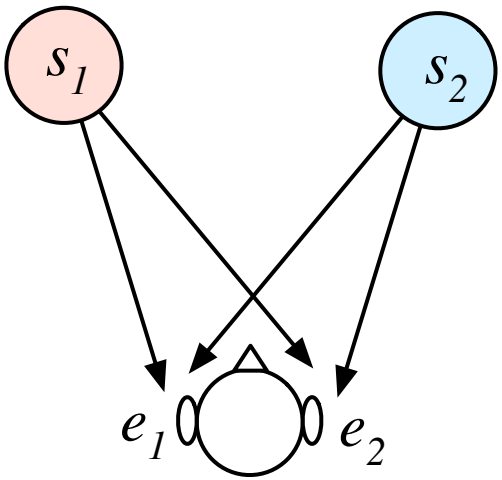

$$
\begin{aligned}
e_1(n) &= a_{11}s_1(n-d_{11}) + a_{21}s_2(n-d_{21}) \\
e_2(n) &= a_{12}s_1(n-d_{12}) + a_{22}s_2(n-d_{22}) \\
\mathrm{IC} &= \frac{\max\{a_{11}a_{12}p_1, a_{21}a_{22}p_2\}}{\sqrt{(a_{11}^2p_1 + a_{21}^2p_2)(a_{12}^2p_1 + a_{22}^2p_2)}}
\end{aligned}
$$

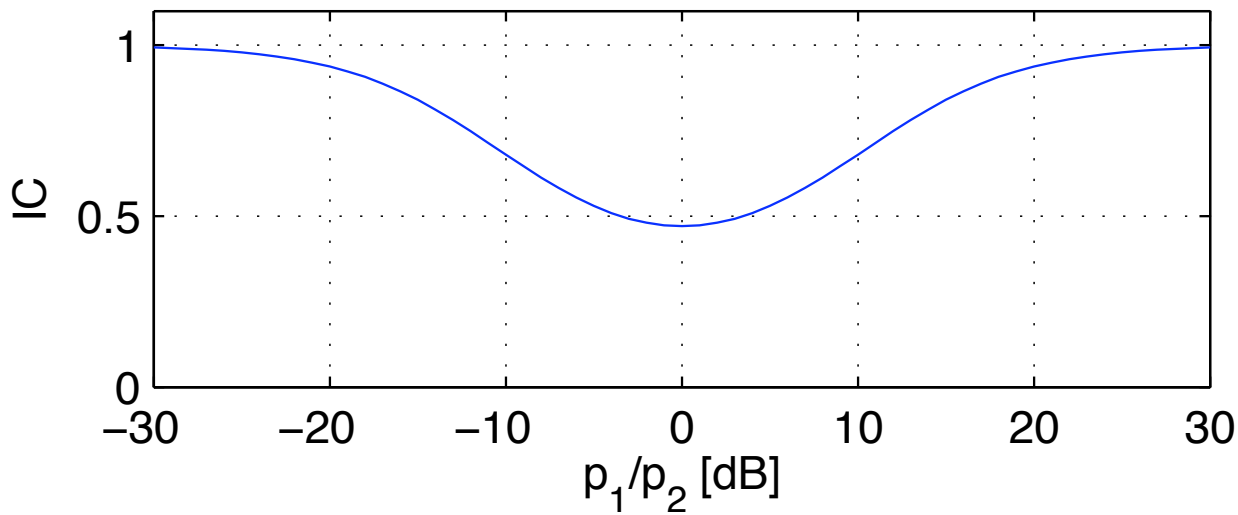

→ IC can be used as a **"single-source-active indicator"**

Source Localization in Complex Listening Scenarios

IC and reflections

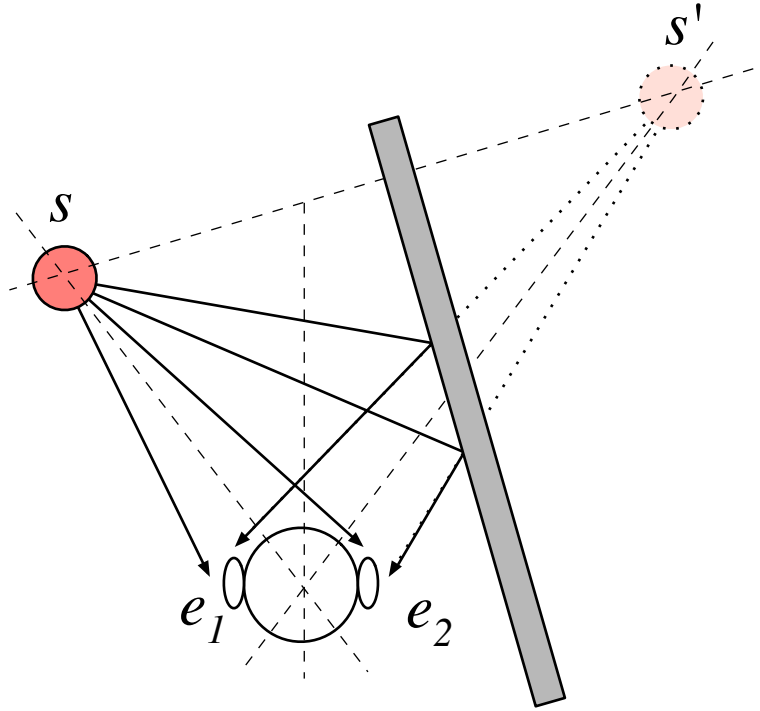

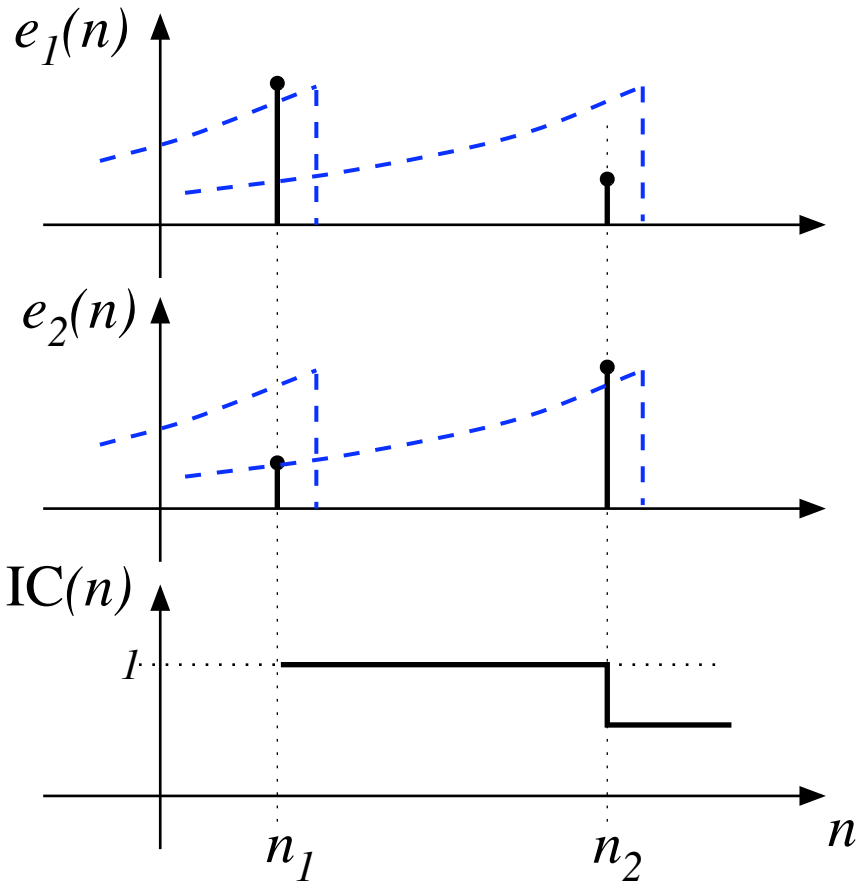

→ IC can be used as a **"first-wavefront indicator"**

Source Localization in Complex Listening Scenarios

Model for source localization

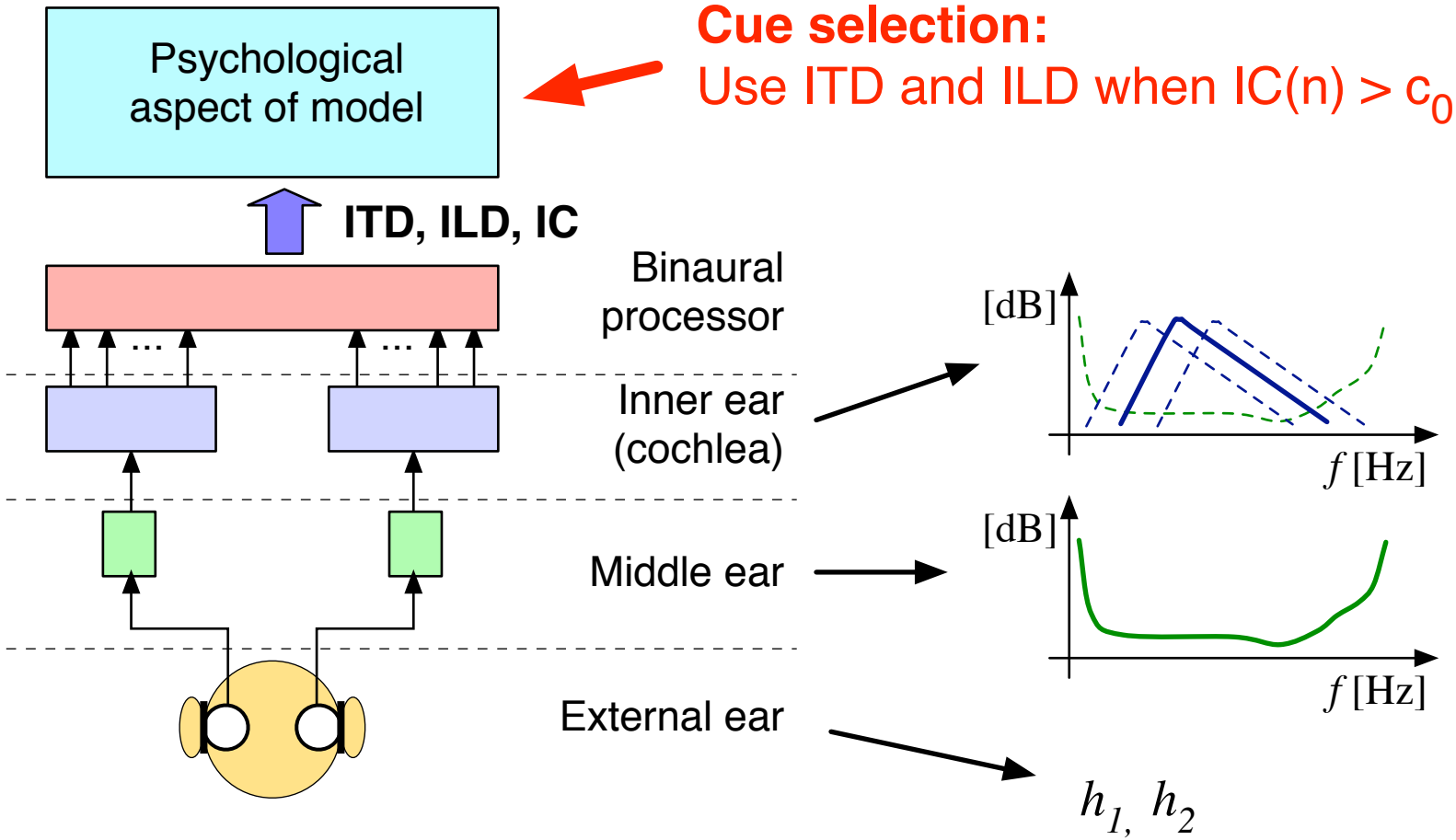

Source Localization in Complex Listening Scenarios

Two concurrent male speech sources, free-field

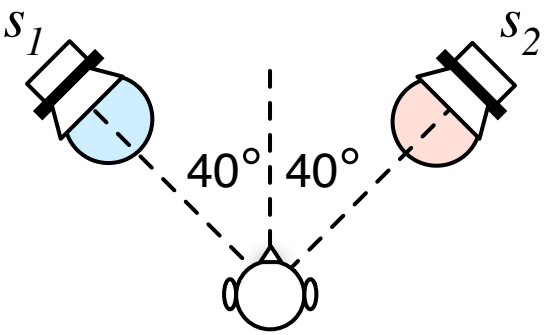

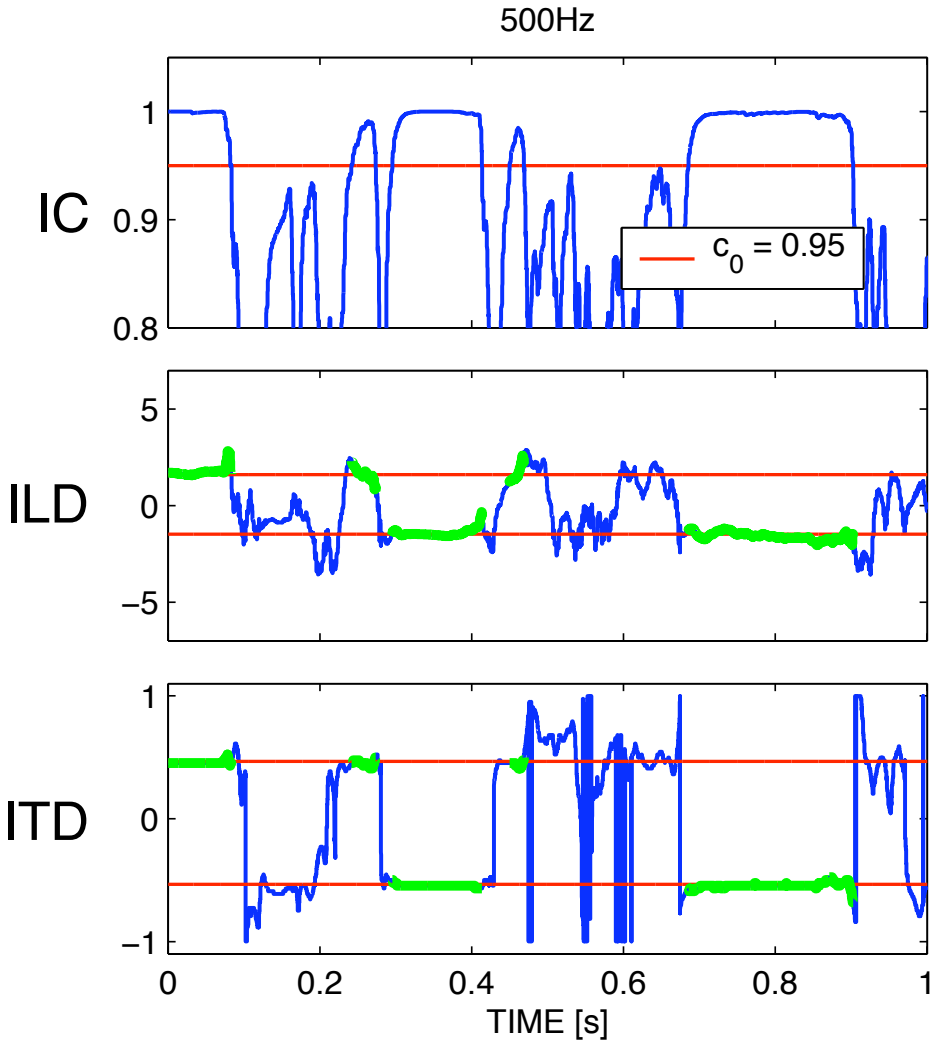

Source Localization in Complex Listening Scenarios

Precedence effect:

(Broadband pulses, 5ms lead/lag delay, free-field)

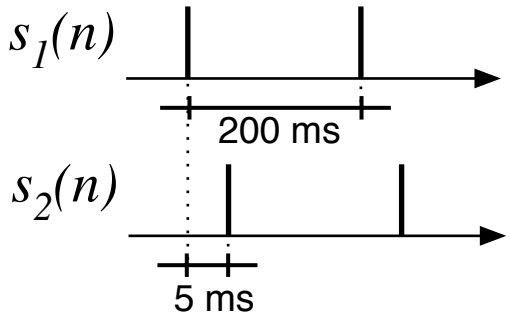

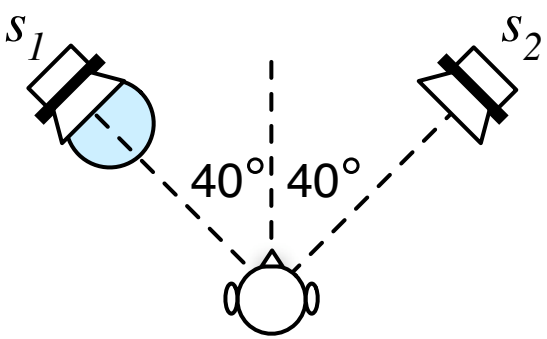

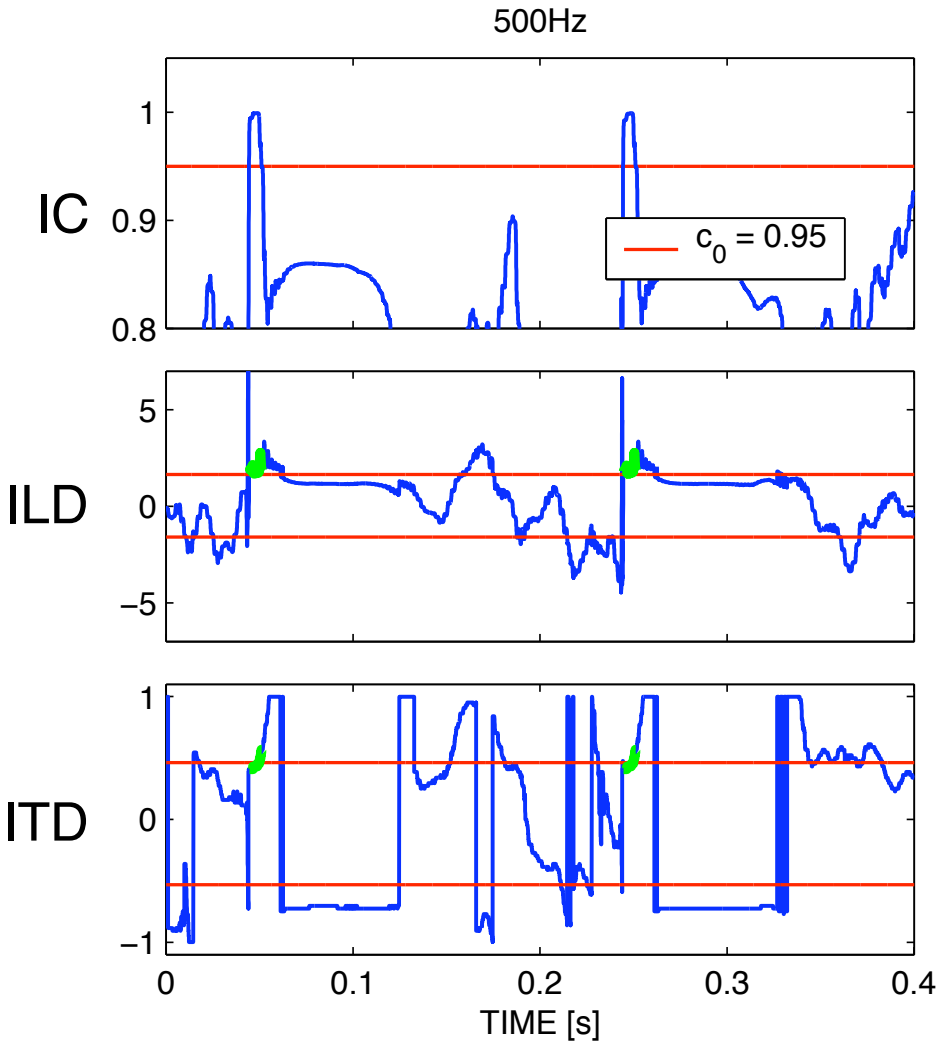

Source Localization in Complex Listening Scenarios

Source localization in reverberant environment:
(2 male speech sources, 500Hz: RT = 2s, 2kHz: RT = 1.4s)

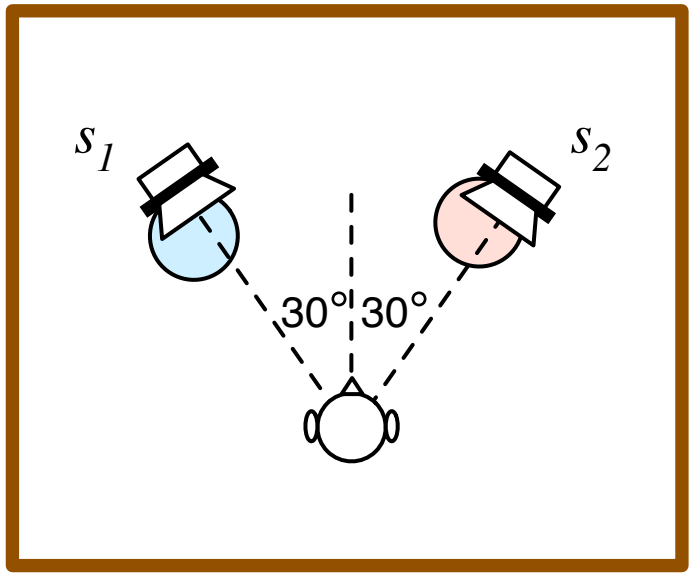

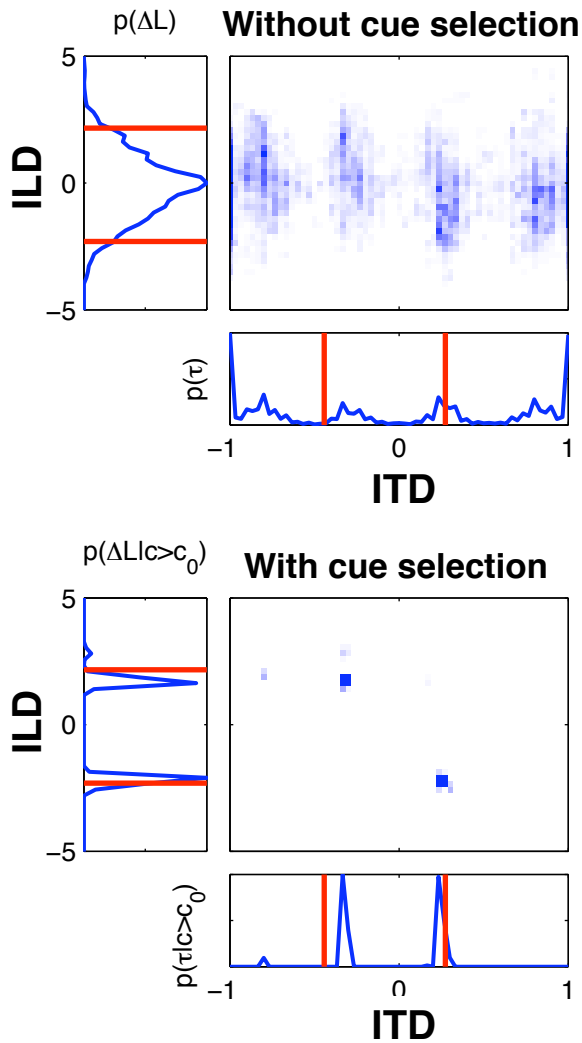

Parametric Coding of Spatial Audio

Contents:

- Audio Coding and Thesis Motivation
- Background
- Binaural Cue Coding (BCC)
- Variations of BCC
- Source Localization in Complex Listening Scenarios
- **Conclusions**

Parametric Coding of Spatial Audio

Conclusions

Binaural Cue Coding (BCC):
- low bitrate coding of stereo and multi-channel audio signals
- low bitrate transmission of independent sources
- bridging between different audio formats

Proposed source localization model:
- speculates about role of IC for "cue selection"
- attempts at explaining source localization in complex listening

Parametric Coding of Spatial Audio

Future work:

Multi-channel BCC parameters: Different more efficient and flexible parametrization.

BCC applied to binaural recordings: Further investigate.

Psychoacoustic experiments with BCC stimuli.

Source localization model:
- Adaptation of cue selection threshold
- More simulations, psychoacoustic experiments
- Can model be related to other attributes of auditory spatial image?

Parametric Coding of Spatial Audio

Acknowledgements:

Martin Vetterli, Peter Kroon, and all colleagues I collaborated with.

Thanks to all of you for coming to this defense!

Audio Coding

Hybrid audio coding:

Intensity stereo coding (ISC):

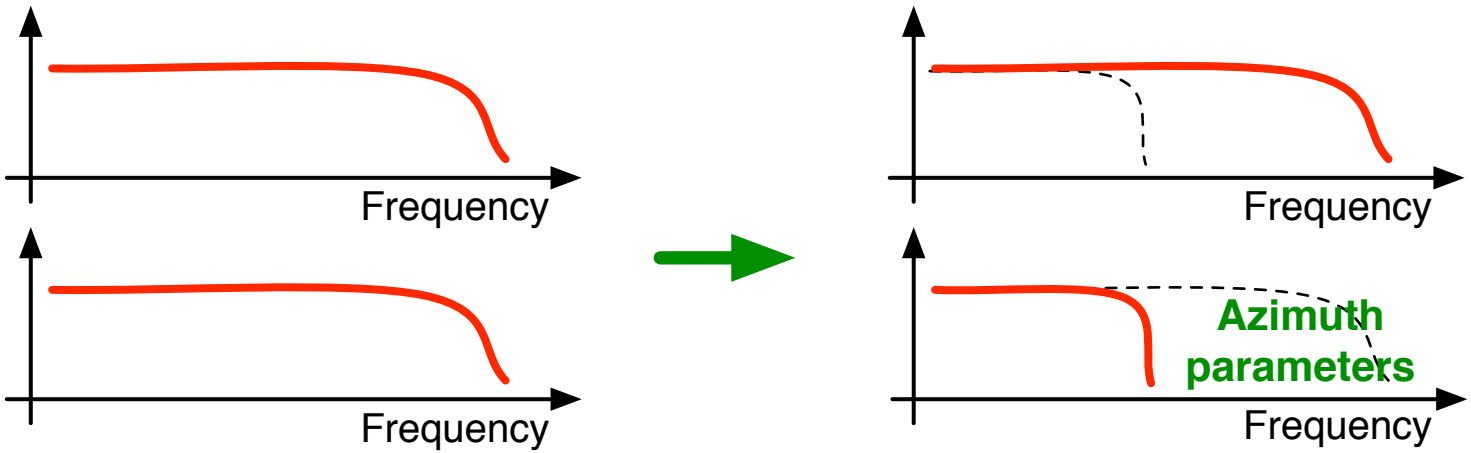

Spectral bandwidth replication (SBR):

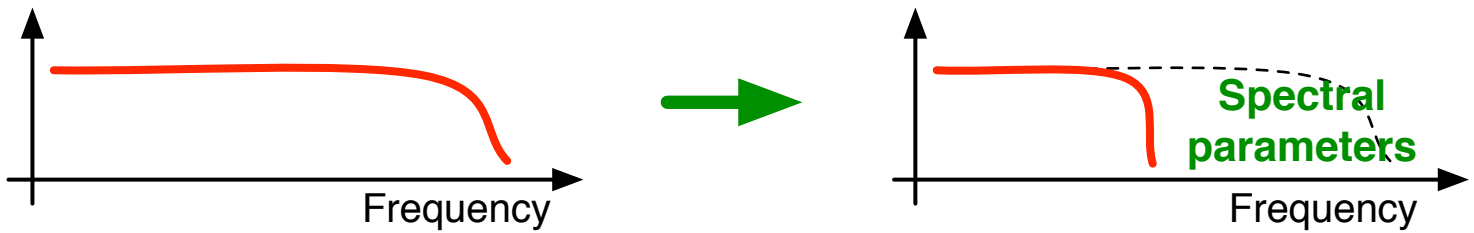

Binaural Cue Coding (BCC)

Downmix with equalization

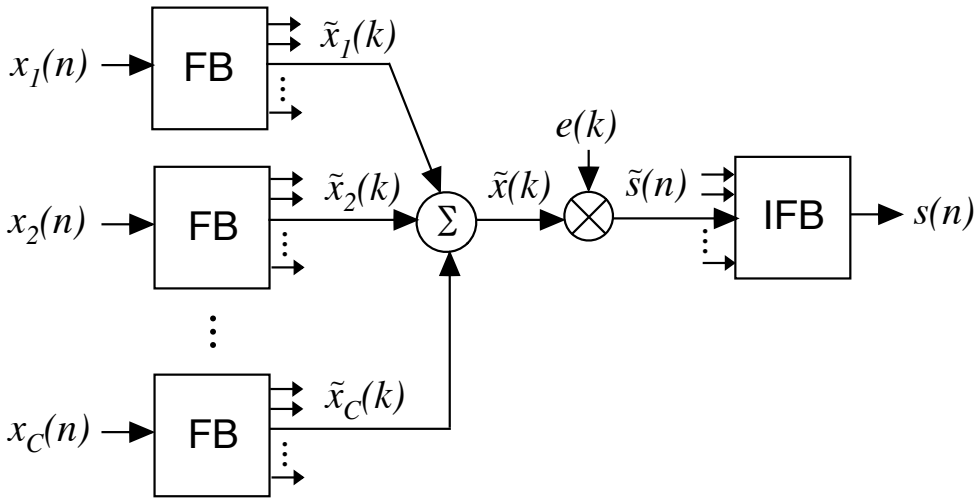

Numerical example:

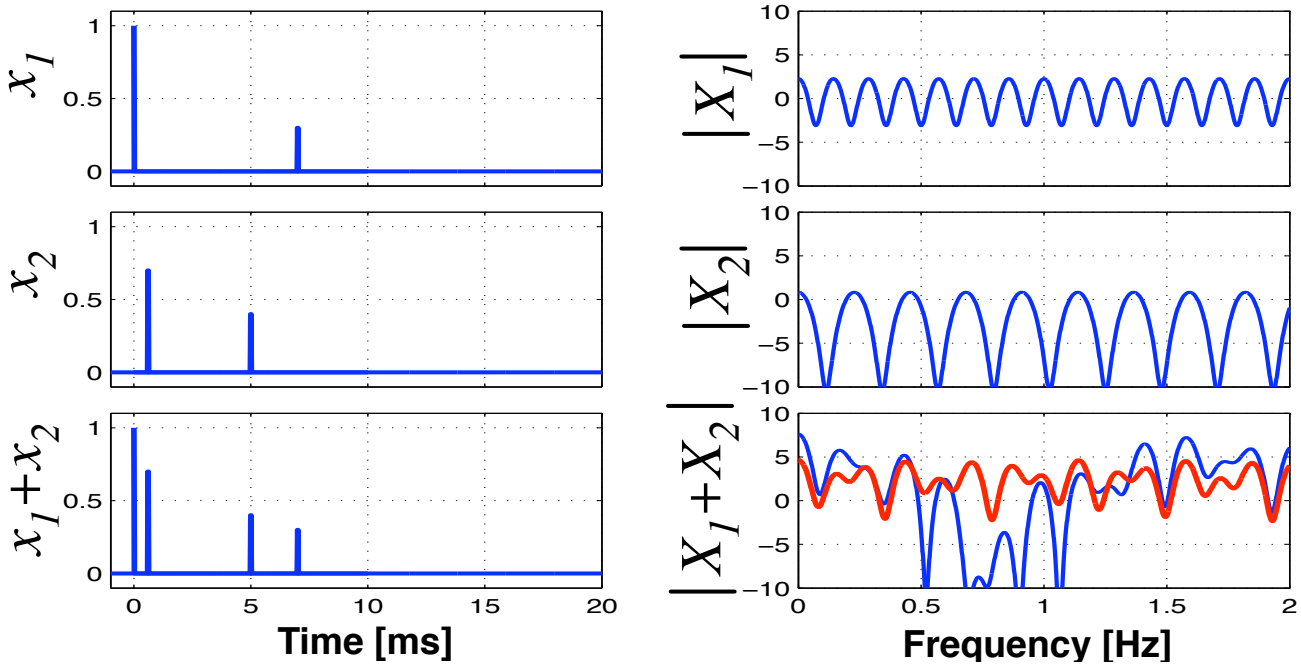

Binaural Cue Coding (BCC)

Alternative ICTD/ICLD/ICC synthesis

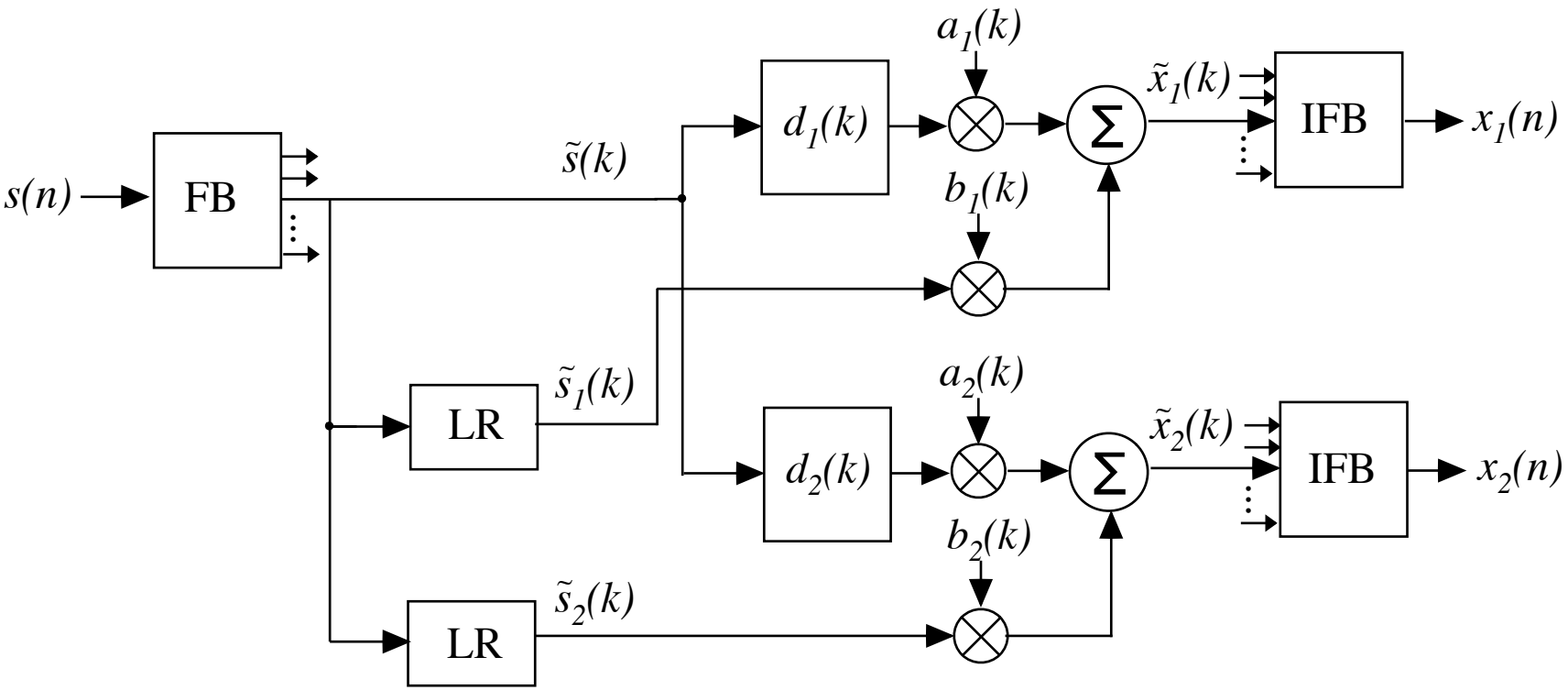

a_i, b_i : scale factors

LR: late reverberation filter

Coherent/**incoherent** channel power:

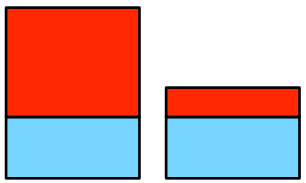

Binaural Cue Coding (BCC)

Subjective evaluation: 5-channel audio quality

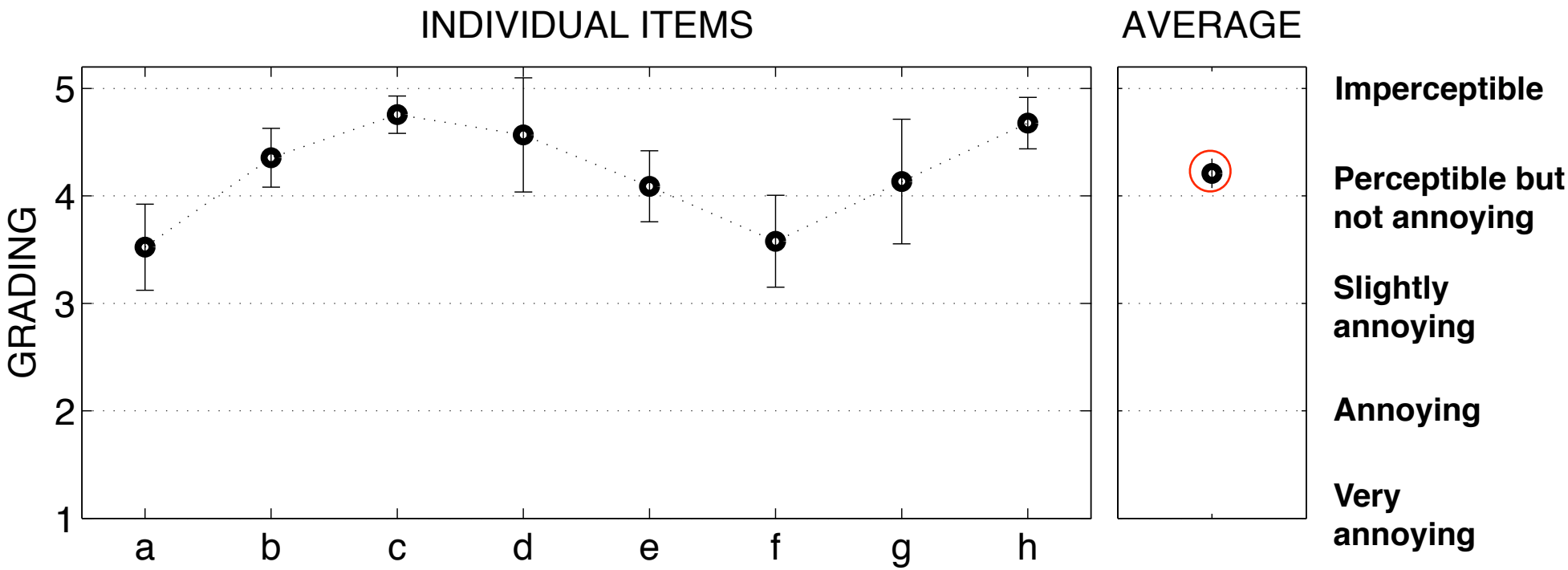

Hidden reference test (ITU-R BS.1116), loudspeaker listening, 9 subjects

Binaural Cue Coding (BCC)

Subjective evaluation: ICLD time resolution

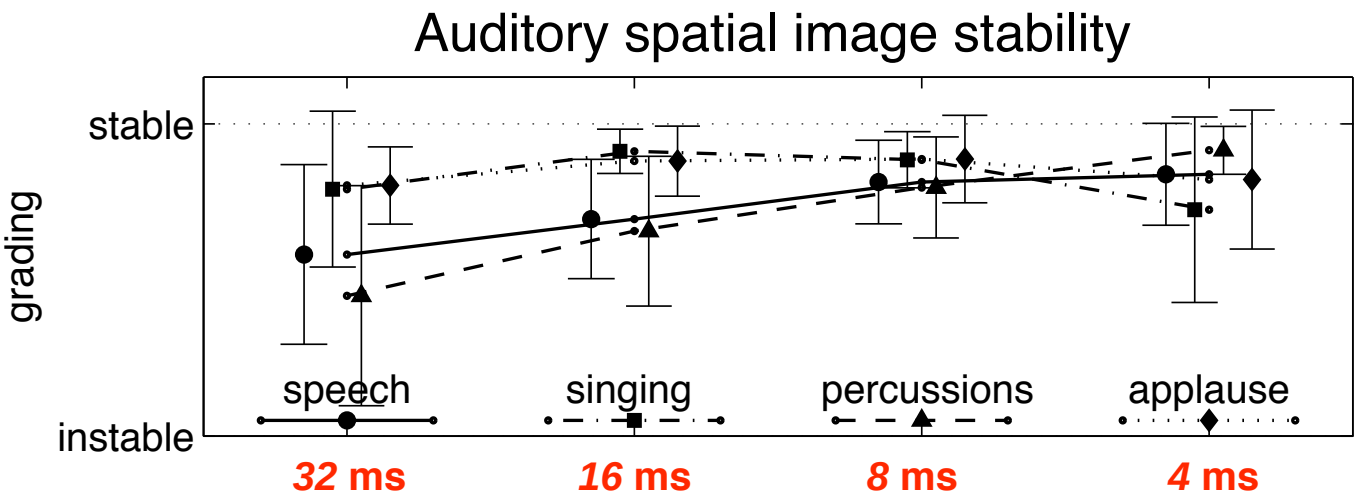

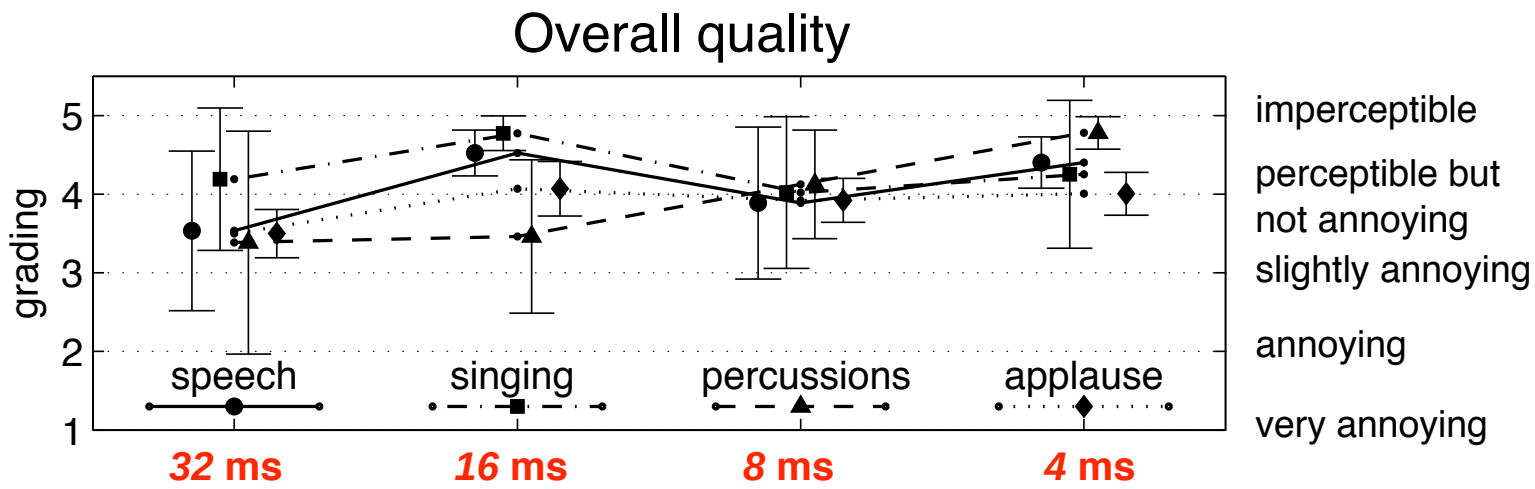

Variations of BCC

C-to-E BCC

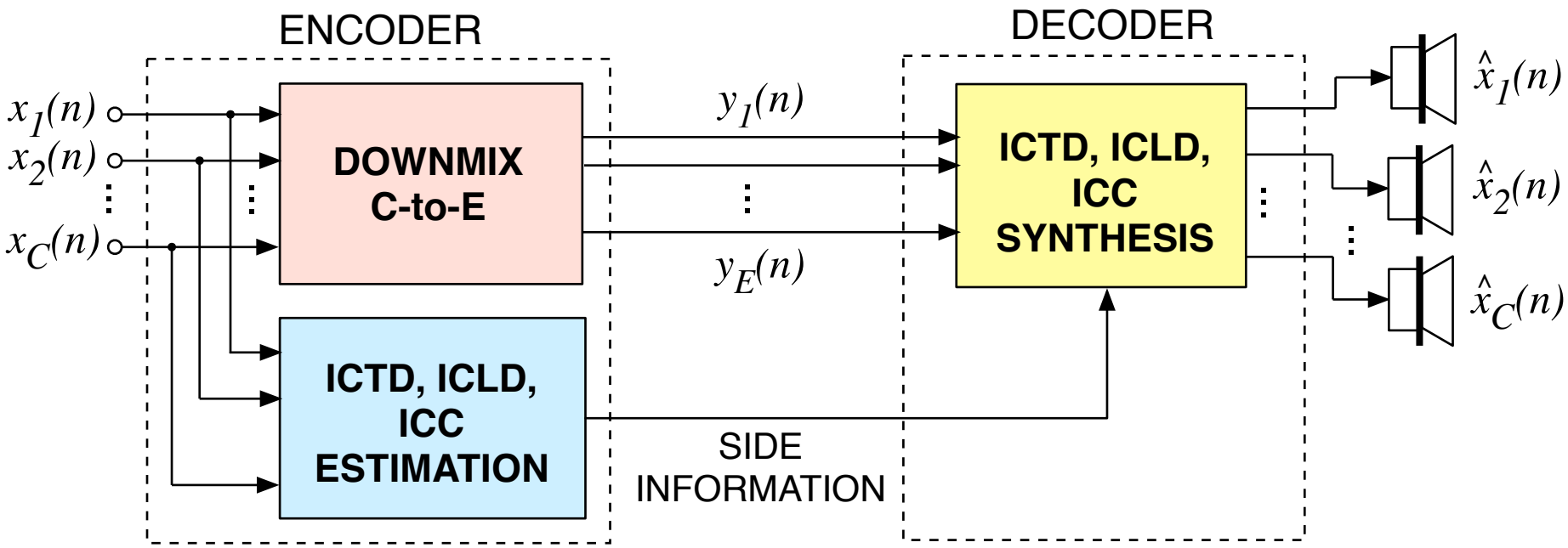

- Potentially better quality than C-to-1 BCC
- E-channel backwards compatible coding of C-channel audio

Variations of BCC

6-to-5 BCC: 5.1 backwards compatible coding of 6.1

Downmix:

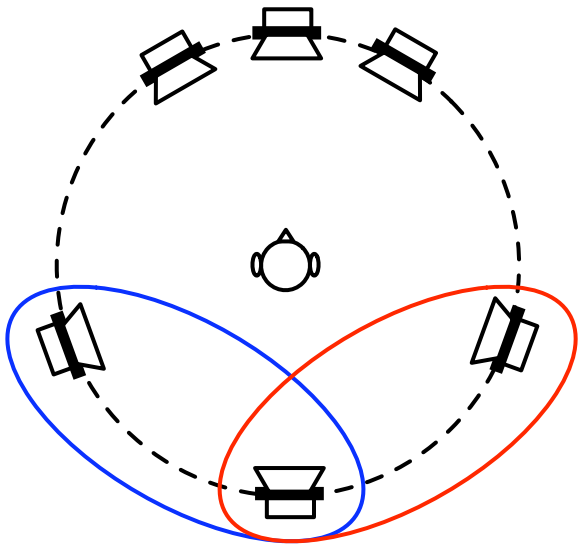

Dolby Surround EX
loudspeaker positioning

5-to-6 Synthesis:

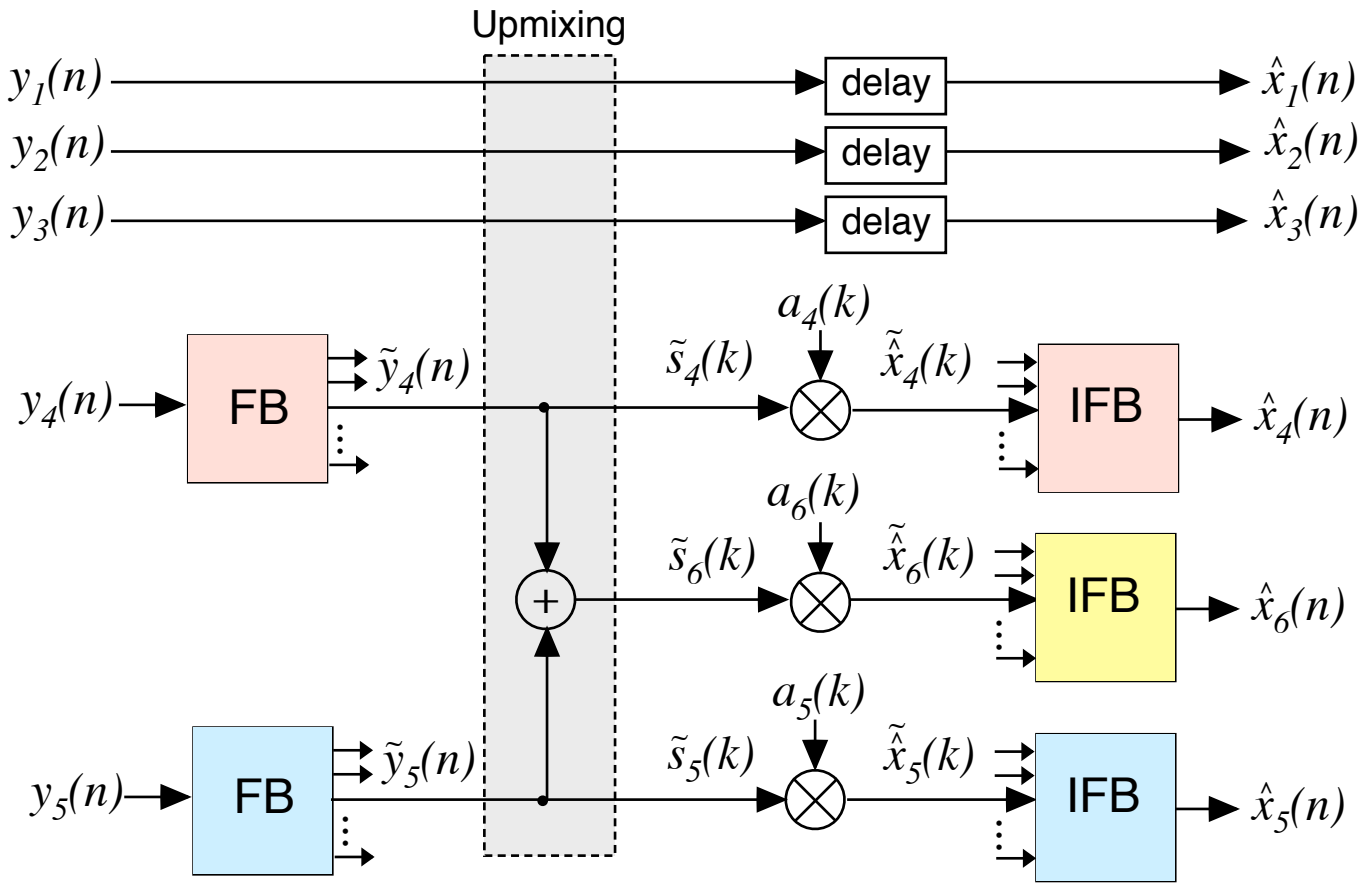

Variations of BCC

7-to-5 BCC: 5.1 backwards compatible coding of 7.1

Downmix:

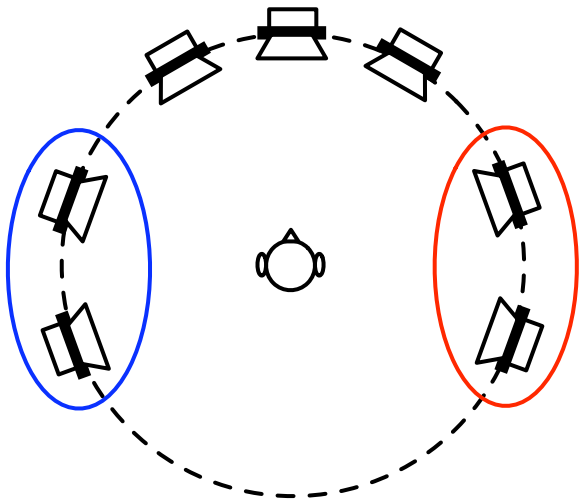

Lexicon Logic 7
loudspeaker positioning

5-to-7 Synthesis:

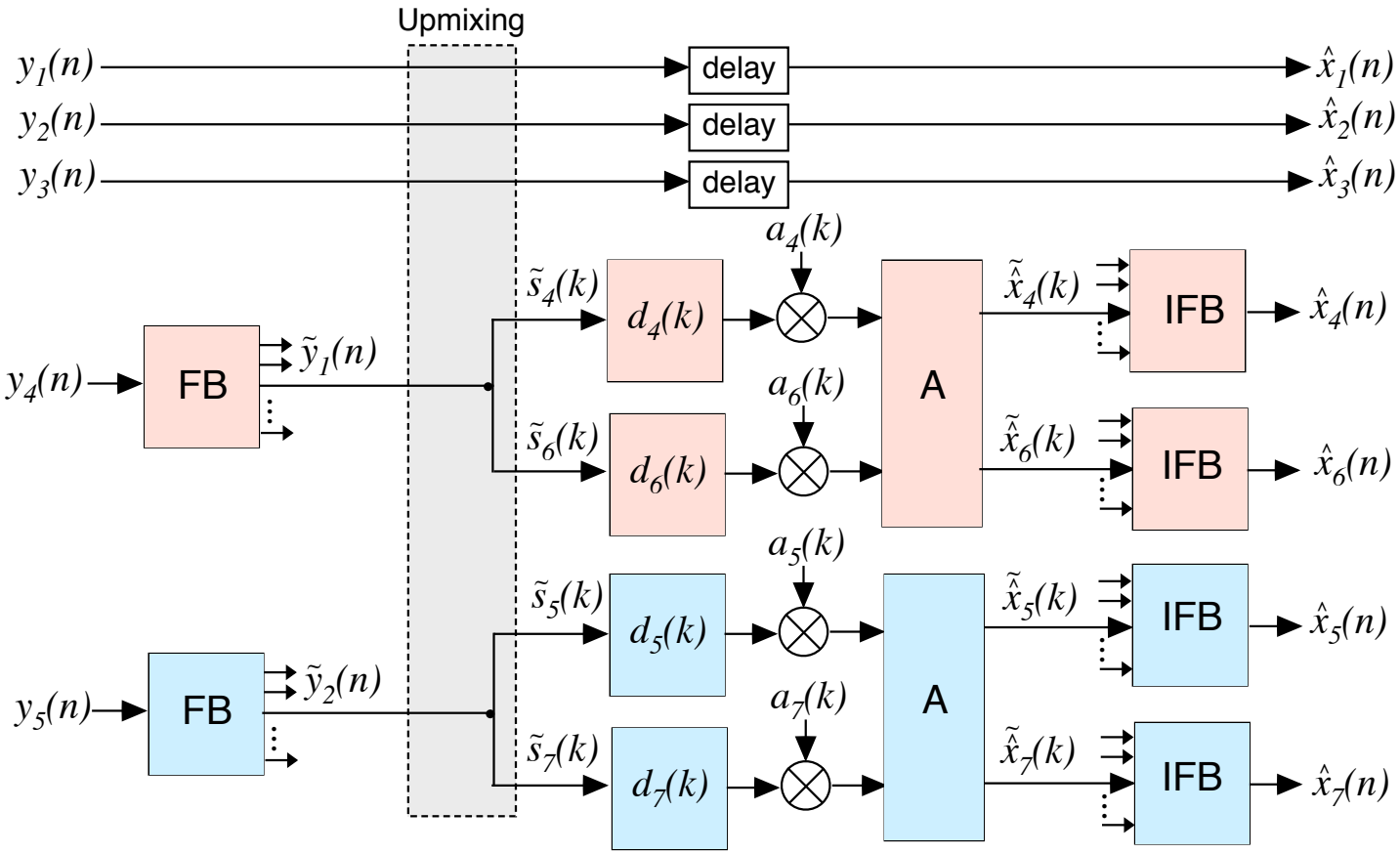

Variations of BCC

Hybrid BCC

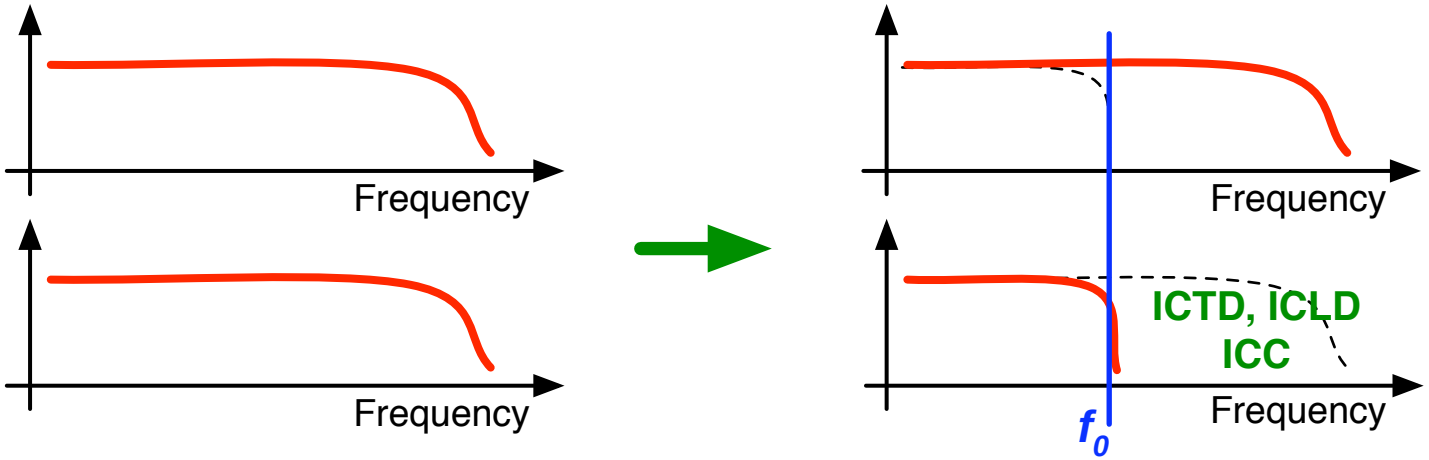

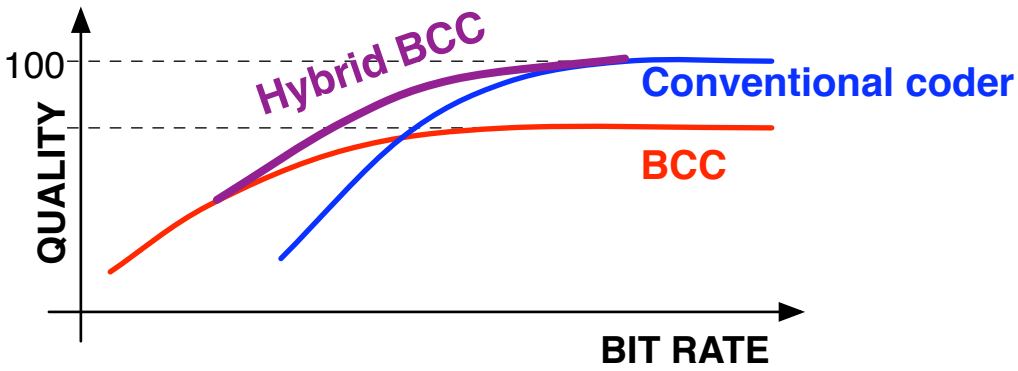

Differences to intensity stereo coding:

- consider more cues (not only intensities)
- use separate filterbank (better performance)

Variations of BCC

Hybrid BCC

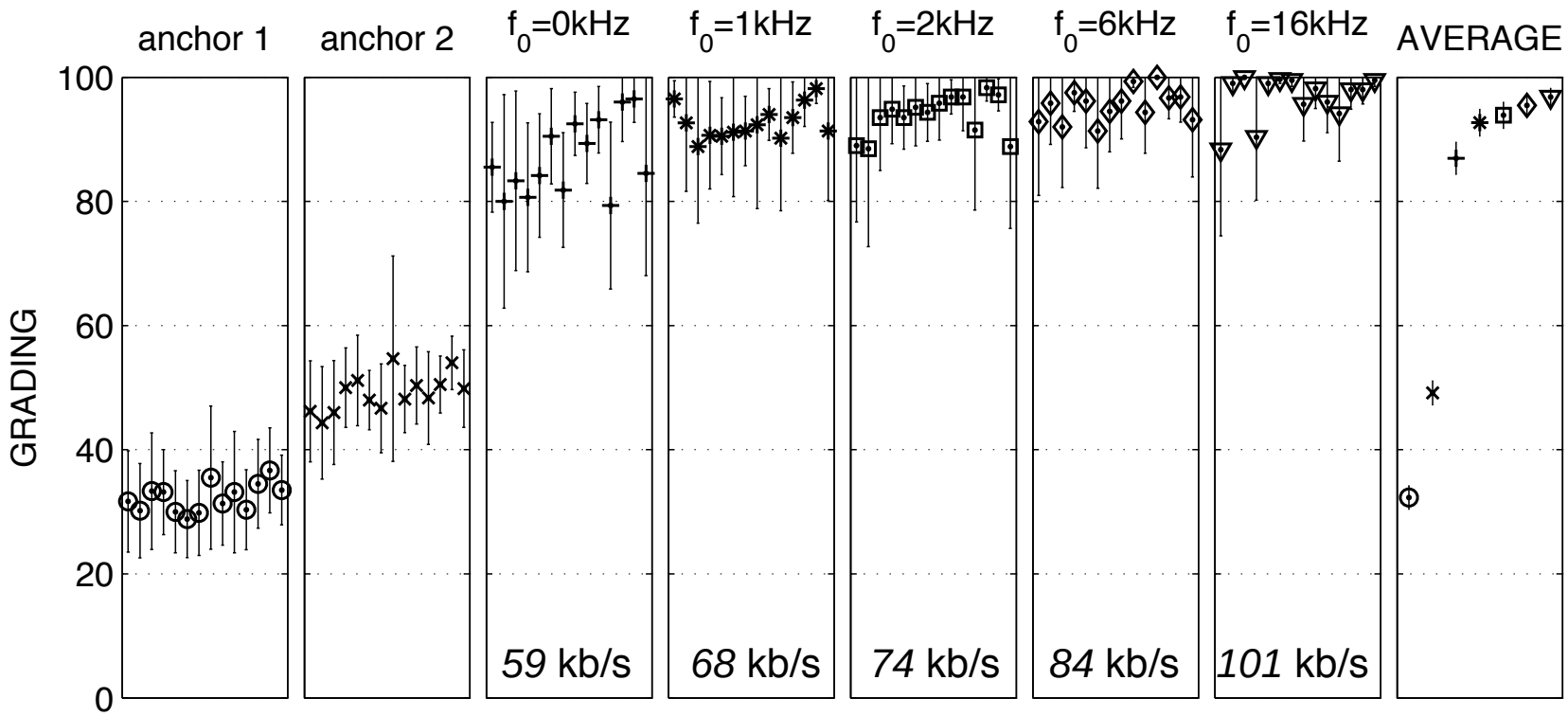

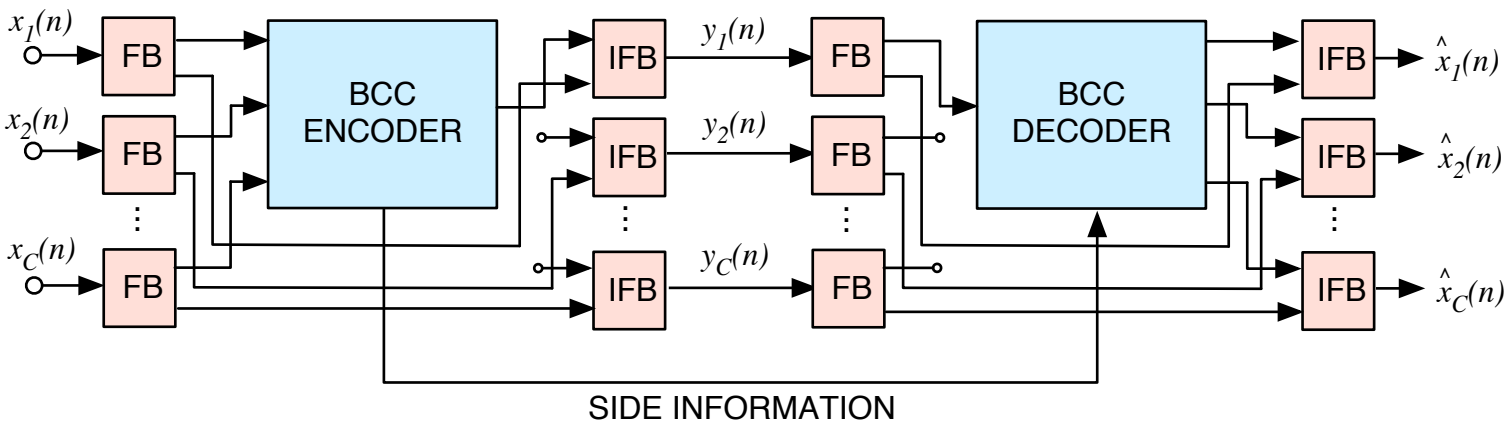

Source Localization in Complex Listening Scenarios

Three and five concurrent male speech sources:
(-30°, 0°, 30°, -80°, 80°, free-field)

Without
cue selection

With
cue selection

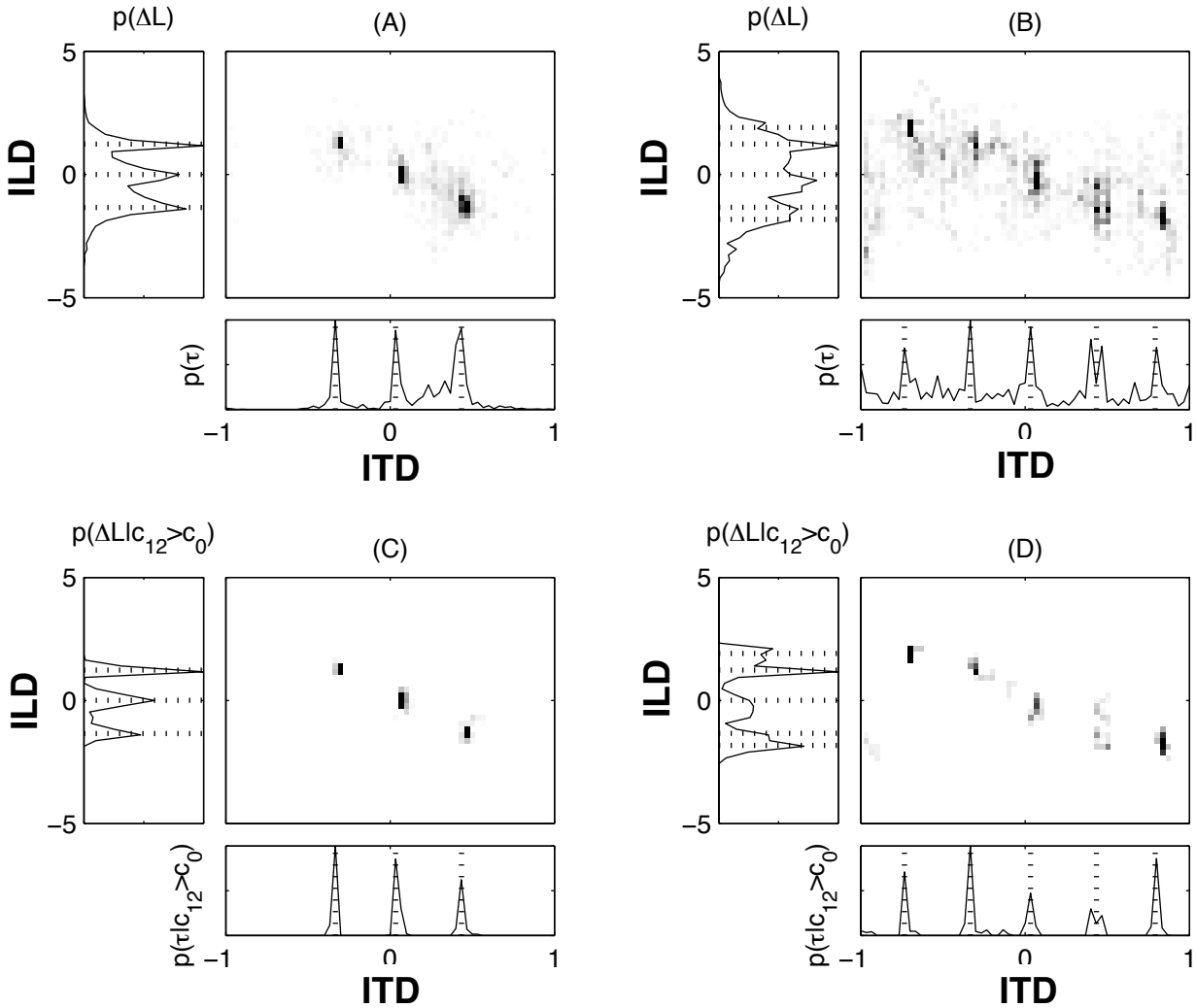

Source Localization in Complex Listening Scenarios

Cue selection: Three phases of the precedence effect, 500Hz critical band

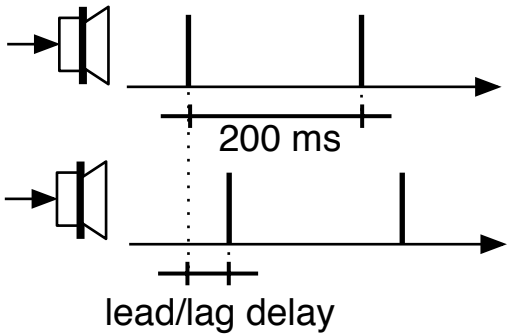

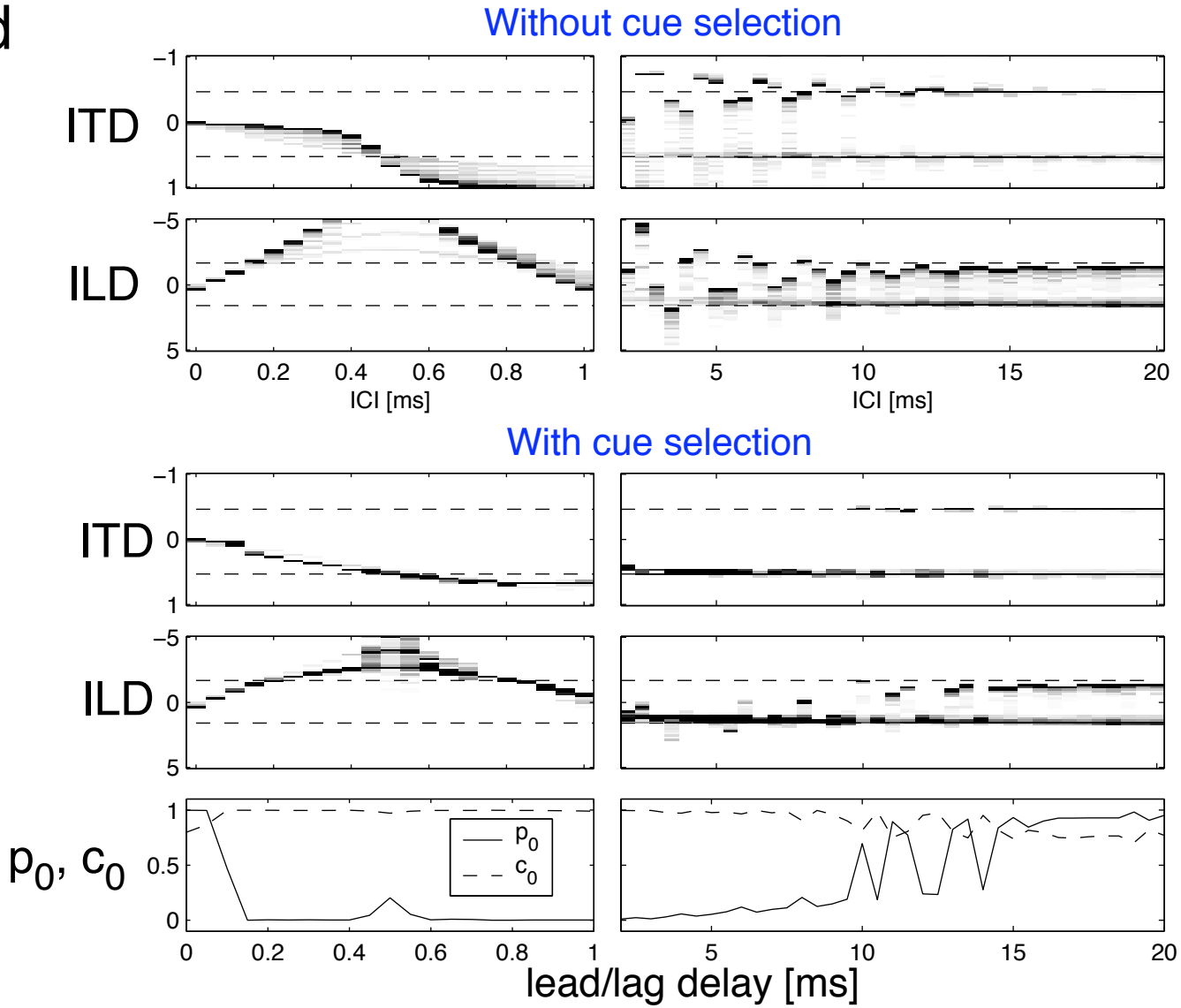

Source Localization in Complex Listening Scenarios

Amplitude panning, free-field, 500Hz critical band

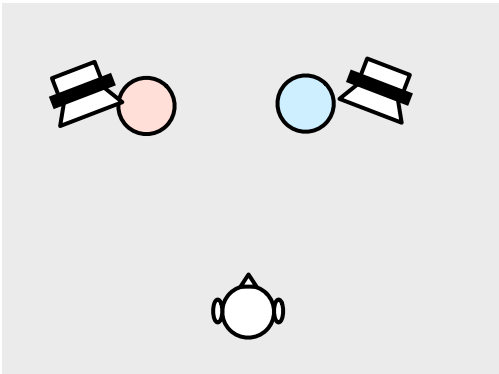

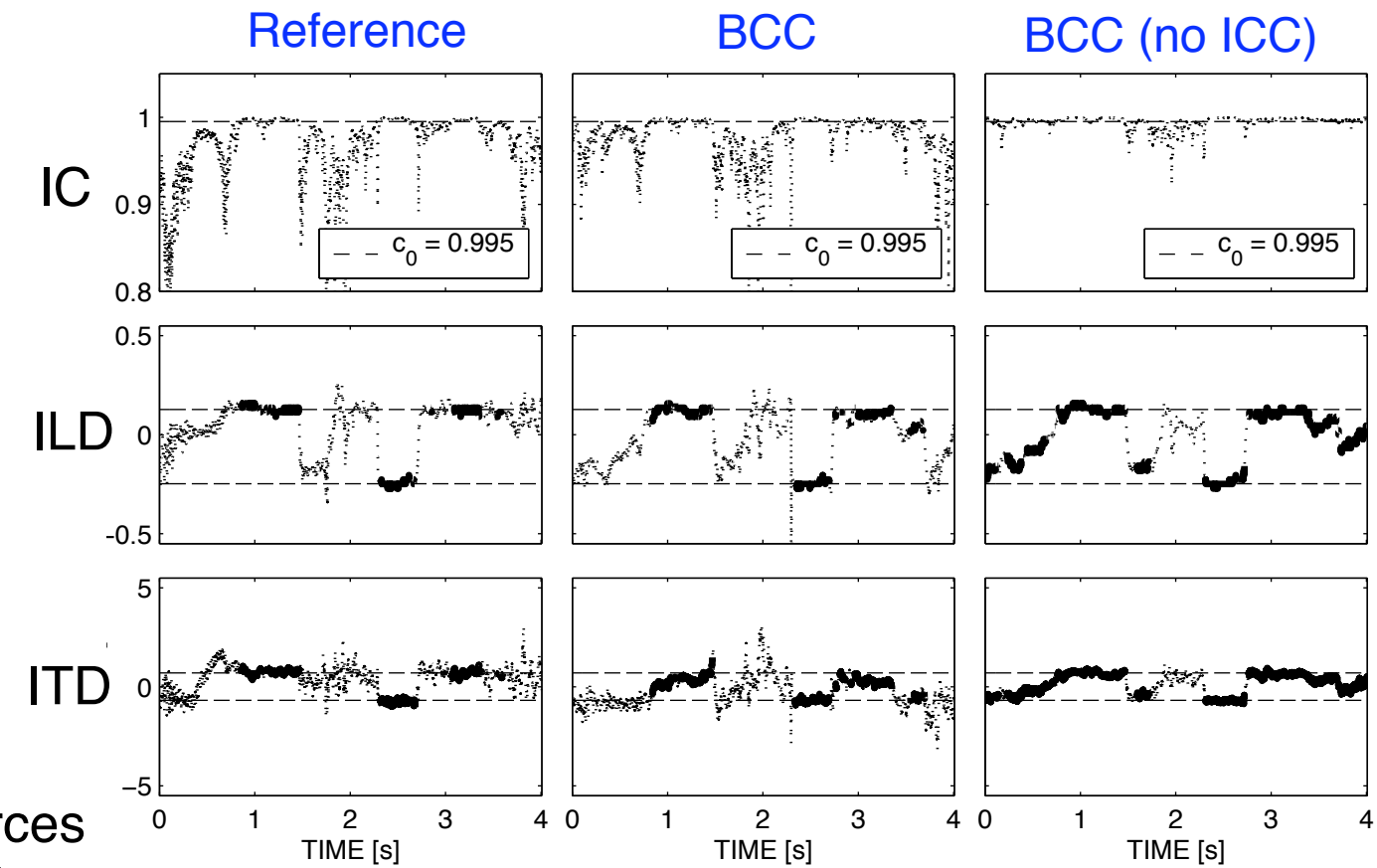

Standard stereo setup
Two male speech sources
+-8dB amplitude panning.