ÉCOLE POLYTECHNIQUE
FÉDÉRALE DE LAUSANNE

2001-22

LESO-PB

Solface ! New Mounting System for PV Facades

Schaller F., Roecker C.

CISBAT 2001

3 - 4 octobre 2001

SOLFACE! NEW MOUNTING SYSTEM FOR PV FACADES

François Schaller, Christian Roecker

EPFL, Ecole Polytechniques de Lausanne/ LESO, Laboratoire d'énergie solaire

CH-1015 Lausanne, Switzerland

ABSTRACT

"Solface" is a new fastening system for photovoltaic laminates. It is based on an unobtrusive frame especially designed for facade integration. As a product of high quality and low cost, it is adjustable to standard and custom made laminates. Particular care has been taken to offer a quick mounting system with a pleasant appearance, minimising the "frame effect".

"Solface" is a product developed within the European Project "PV en face!", part of the Joule III programme. Partners were Ecofys (NL), EPFL - LESO (CH), BP Solar (GB) and TFM (ES). The project ran from 1/8/98 to 31/12/01.

RÉSUMÉ

"Solface" est un nouveau système de montage conçu pour l'intégration de lamifiés photovoltaïques (PV) en façade. C'est un produit de qualité à bas prix , adaptable à des lamifiés standards ou sur mesure. La particularité du système est de pouvoir réaliser rapidement des installations esthétiques ayant un effet de cadre minimum autour des modules.

"Solface" a été développé dans le cadre du projet européen "PV en face!", part du programme Joule III. Les partenaires étaient Ecofys (NL), EPFL - LESO (CH), BP Solar (GB) et TFM (SP). Le projet s'est déroulé du 1/8/98 au 31/12/00.

1. INTRODUCTION

Nowadays, PV plants are a good solution to valorise building envelopes. They not only produce clean electricity , but also convey a very good image.

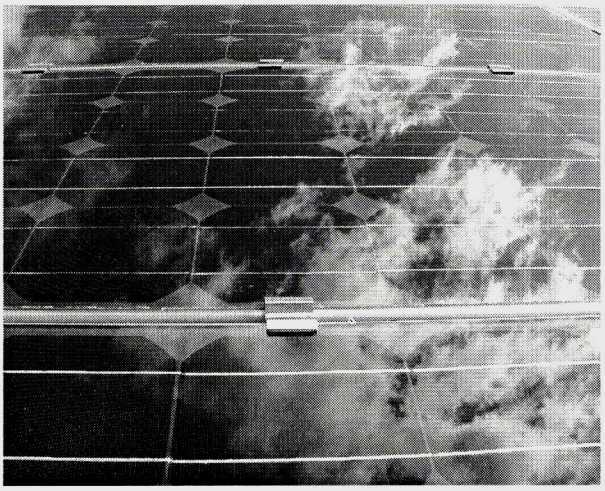

Fig. 1. PV facade with « Solface »

Many innovative fastening systems have already been developed for PV integration into flat or tilted roofs. But while roof integration is becoming commonplace, facade systems are still rare. These installations are often custom made and correspondingly expensive. The development of facade systems opens up new integration possibilities and will favour the use of existing buildings surfaces. To achieve a breakthrough in the market for PV facades, there is a need for high quality systems at low cost and with a good visual acceptance.

The identification of facade technologies and a market analysis in Switzerland indicated good market opportunities for PV integrated as add-on or cladding elements, i.e. panels mounted on blind walls as a protection screen or fixed in front of a facade as an extra element.

"Solface" was developed with this potential in mind.

2. PRODUCT DESCRIPTION

The building industry has developed numerous cladding systems. Most of these products were developed for panels with a sufficient internal mechanical strength such as metal sheets, fibre cement panels, etc... They can be used for PV panels with some modifications but such solutions require custom made PV with thick pieces of glass (more expensive) and they do not always present a nice appearance.

Therefore, we chose to develop a new fastening system focused on PV integration.. The basic idea was to design an unobtrusive frame with a good mechanical strength for PV plants with the appearance of a uniform glass surface without visible frames.

Obviously the system should also greatly simplify the mounting process.

An overview of the concept is given in Fig. 2. It can be divided into 3 main parts with specific functions:

1. The framing system
2. The fastening system of the PV laminate to the frame
3. The fastening system of the frame to the façade

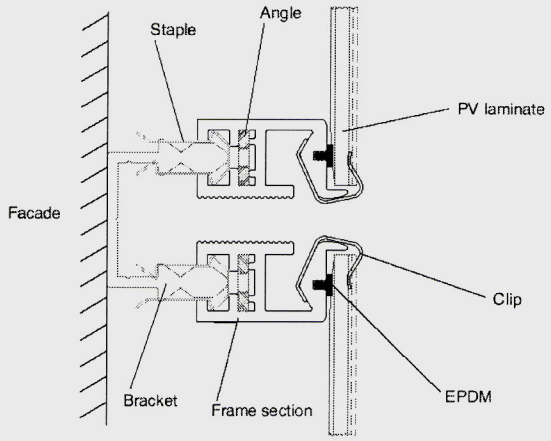

Fig. 2. "Solface" concept

The **frame section** is the main element of the concept. It must provide aesthetic and mechanical quality at a minimum production cost. Particular care was taken to make the front and side unobtrusive but still protect the edges of the laminates. The size was also optimised to get a light and low cost element.

Angle pieces were developed to provide a good frame cohesion . They are secured with special self-stamping screws or can be stamped with a machine as for window frames.

The PV laminates are fastened to the frame section with adapted **clips**. These pieces are made of thin high-resistance stainless steel and are optimised to provide a good distribution of forces on the laminate. Their shape follows the lines of the frame section with a minimum number of bends and was prestressed when mounted for a better assembly.

To fix the PV panel on the façade, we developed an innovative solution with two pieces: a **staple** and a **bracket**. The staple is inserted in the guide section of the frame and clicked on the brackets, which have previously been screwed onto the façade framework. This concept allows quick fastening and can easily be adapted to different mounting options such as for vertical or tilted PV modules.

3. MECHANICAL STRENGTH

Mechanical tests were performed to check that "Solface" resists weather stresses such as wind, thermal expansion and freezing. In particular, the laminate strength to wind forces was thoroughly tested.

The numerical software "FINELG" was used in the process. This program was developed by Professor Frey of the civil engineering department of the EPFL. It is generally used by civil engineers for complex objects. Calculation results were checked by tensile stresses measurements using a testing plant with a water pond. The PV laminates were mounted horizontally and a plastic reservoir filled with water was placed on the laminate to simulate the wind pressure. Dynamic solicitations were also generated by shaking the laminate with an eccentric machine.

We analysed the distribution of stresses in the laminate with clips of different widths and at different locations under a wind pressure of 2400 Pa (international standard for framed PV, IEC 1215). Based on these results, the number, the repartition and the shape of the clips have been optimised. For example, a standard BP 585 panel will typically be fastened with 6 clips of 45mm width.

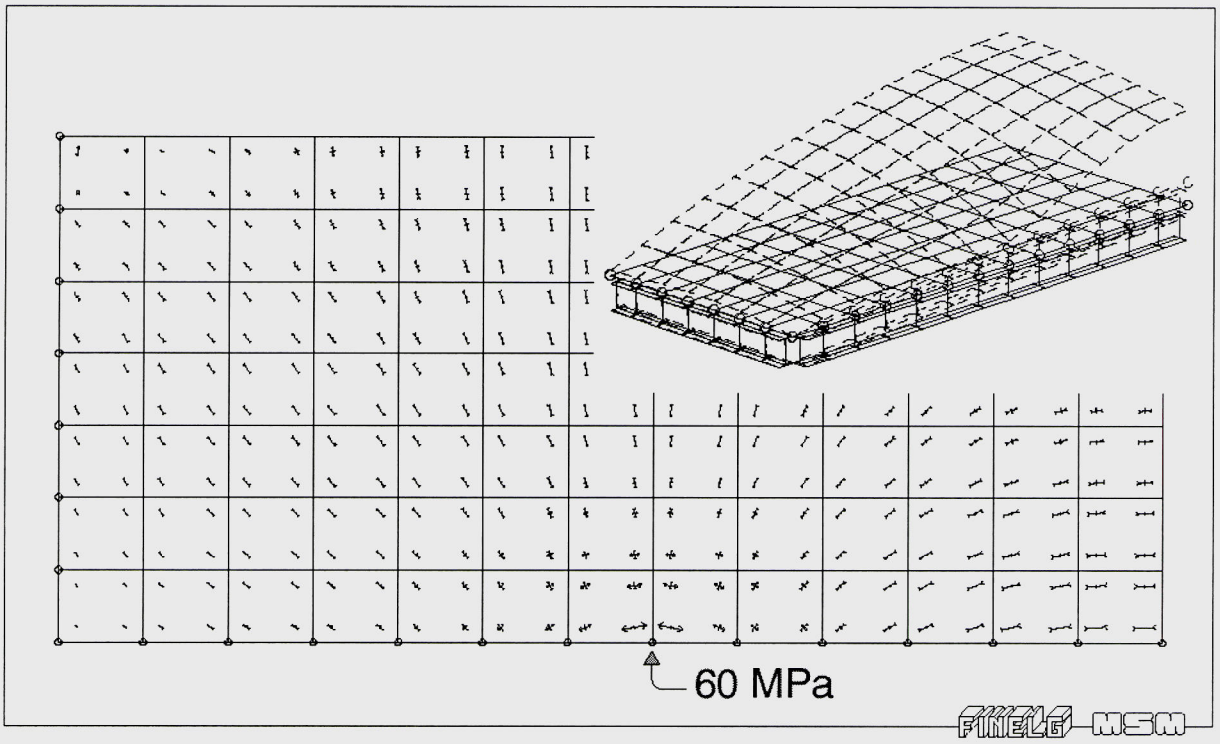

Fig. 3. Computing of the deformation and the tensile stresses

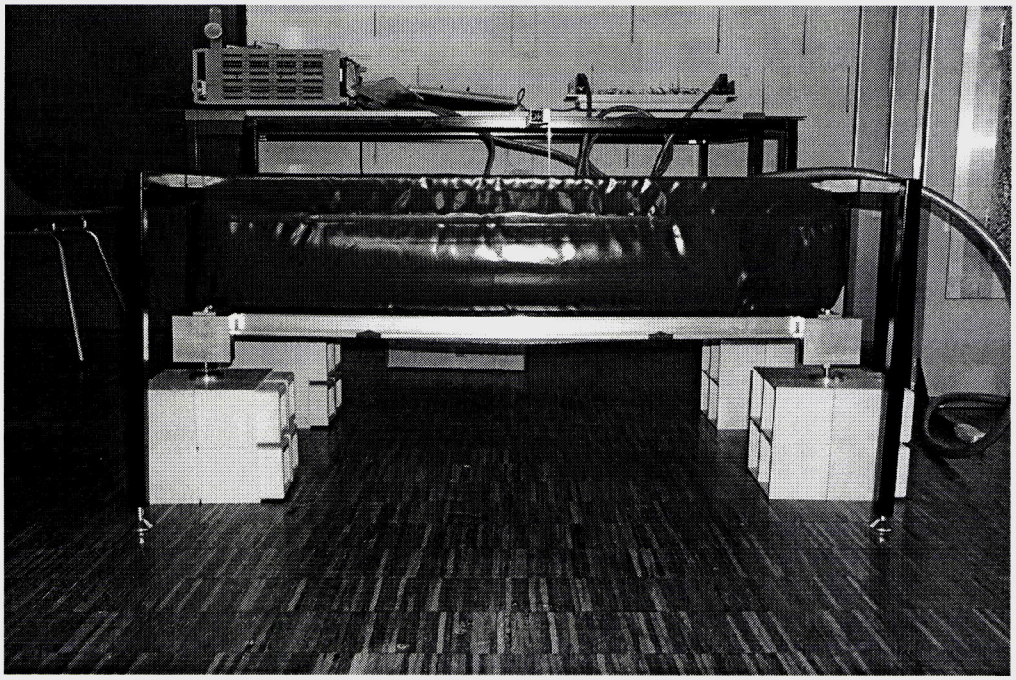

Fig. 4. Testing plant for tensile stresses measurements

4. MOUNTING & HANDLING

A prototype plant was built to evaluate the mounting procedure and the general appearance of the concept. The assembly was quick, simple and reliable. The fitter tested the procedure of replacing defective panels. He completed the work in less than 15min. The operation remains delicate however and requires a careful assembler.

The architects and other people who visited this prototype plant liked the general appearance and in particular the discreteness of the attachment unit. They suggested to paint the aluminium frame section in black or dark grey.

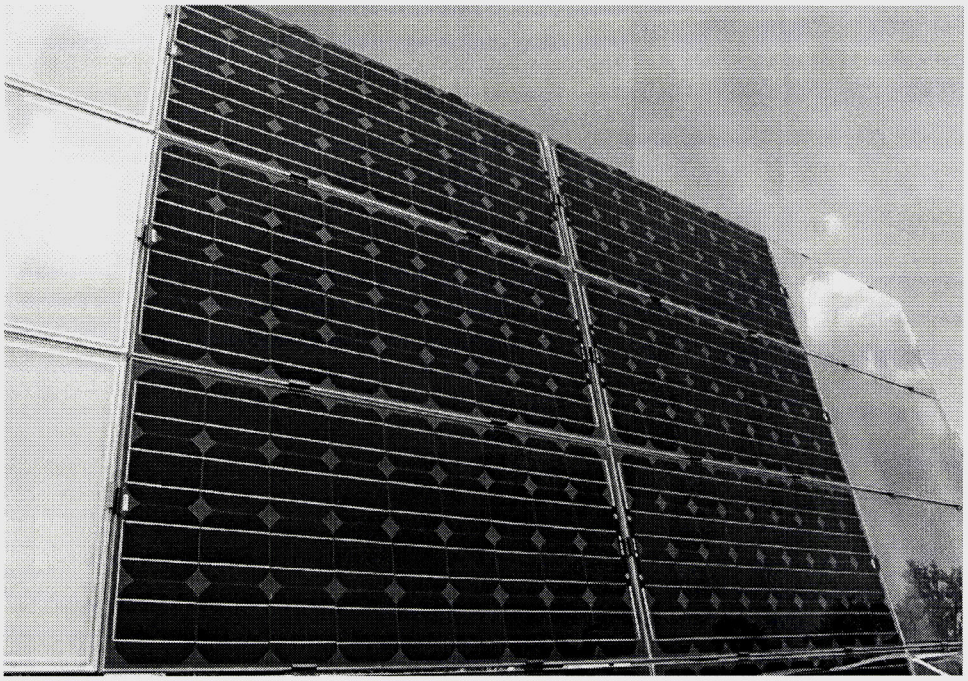

Fig. 5. Prototype plant

5. COST ASSESSMENT

The prices were calculated for PV plants of a total of 100 kW installed, with standard PV laminates BP 585. Below 100 kW, the basic investments for the matrixes increase the price of the system too much for marketing at a reasonable cost.

The price of the fastening system and the mounting amounted to about 1.2 €/Wp. If we add a PV module of 3.5 €/W, the electrical connection of 1.2 €/W and the engineering fees of 1.3 €/W, the total installation will cost 7.2 €/W. This value provides a good cost reduction for a facade application where we started with a total cost easily reaching 10 €/W and more.

6. POSSIBLE APPLICATIONS

If "Solface" was initially developed as a cladding system for PV panels on blind walls, the product shows other large fields of application. The use of custom made laminates adjustable to architectural dimensions leads to double skin PV façades combined with different cladding panels such as metal sheets, fibre cement, granite, a.s.o....

Another possible use of "Solface" are tilted PV modules with a sunshade function or a tilted mounting system on a vertical façade. These solutions allow to improve the energy efficiency.

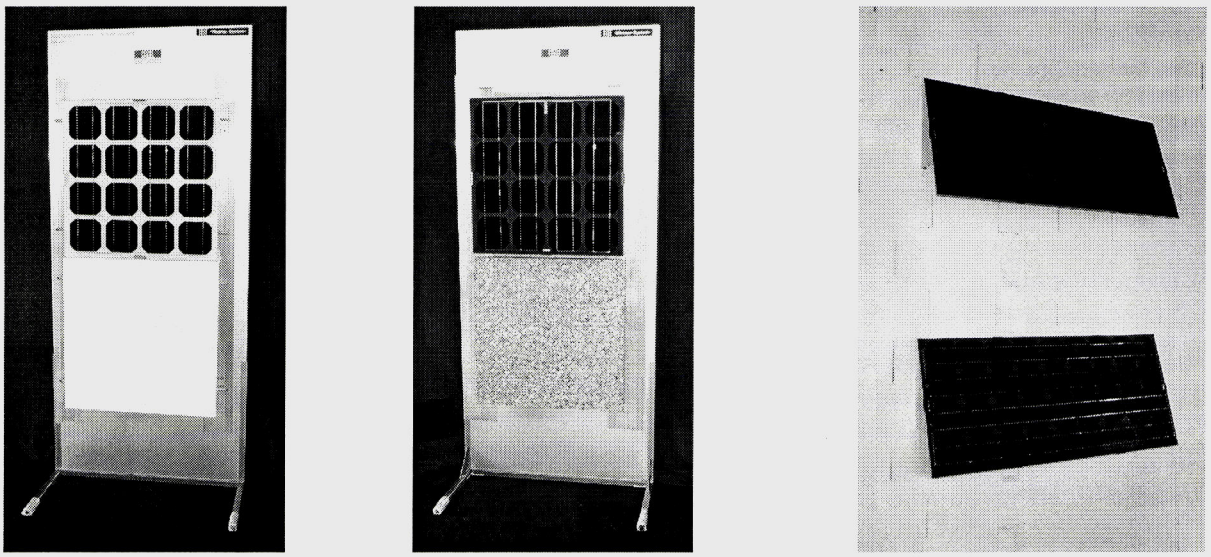

Fig. 6. Integration possibilities

7. Conclusions

"Solface" is an innovative design solution, which certainly will contribute to improve the market acceptance of PV facades throughout Europe. The product has specifications of substantial interest:

- High quality system at low cost for PV facades.
- Pleasant appearance with minimal "frame effect".
- Several possible applications: add-on, rainscreen, tilted PV,...
- Adjustable to standard laminates for cheap plants.
- Adjustable to all architectural dimensions with custom made laminates.
- Good mechanical resistance to the strongest wind forces (standard IEC 1215)
- Easy, quick and reliable mounting.

8. Acknowledgements

The EC-JOULE III Programme supports the development of low-cost, high-quality facade elements. Beside EC support, Novem, who governs the Netherlands BIPV programme participates through the participation of Oskomera BV, a Dutch facade manufacturer. The Swiss Governement enables and totally finances the participation of EPFL-LESO-PB through the OFES department (Federal Office for Education and Science).