Available online at www.sciencedirect.com

ScienceDirect

Procedia Engineering 168 (2016) 1547 – 1550

Procedia Engineering

www.elsevier.com/locate/procedia

30th Eurosensors Conference, EUROSENSORS 2016

A Miniature Multimodal Actuator for Effective Tactile Feedback: Design and Characterization

Tao Li[a,*], Huaiqi Huang[a,b], Jörn Justiz[a], Volker M. Koch[a]

[a] *Institute of Human-Centered Engineering, Bern University of Applied Sciences, Quellgasse 21 CH-2502 Biel, Switzerland*
[b] *Integrated Circuits Lab, EPFL Lausanne, Rue de la Maladiere 71, CH-2000 Neuchatel, Switzerland*

Abstract

We designed a miniature multimodal actuator by combining servomotors and vibrators. The actuator is mainly designed to non-invasively deliver tactile information to human skin by high-frequency vibration and low-frequency pressures simultaneously. By utilizing two modalities at the same time, the actuator stimulates different types of mechanoreceptors and thus has the potential to increase the band width to transfer tactile information. The designed actuator possess the advantage of light weight, compact size, low power consumption, short response time, large ranges of pressure and vibration, and non-back-drivable mechanism. Multimodal actuators provide new tools and possibilities to display tactile information on human skin efficiently and intuitively.
© 2016 The Authors. Published by Elsevier Ltd. This is an open access article under the CC BY-NC-ND license (http://creativecommons.org/licenses/by-nc-nd/4.0/).
Peer-review under responsibility of the organizing committee of the 30th Eurosensors Conference
Keywords: multimodal actuator; tactile feedback

1. Introduction

Tactile sensory feedback devices applied on human skin have important applications in many areas, for example virtual reality, information transfer, and prostheses. Different sensory substitution methods have been developed to deliver tactile information on human skin. The most commonly used tactile feedback devices adopt electrical [1], vibrio, or force [5] stimulation methods. Electrical stimulation encodes tactile information by applying electrical pulses of different strength, duration, and number to human skin. Devices built based on electrical stimulation introduce almost no delay to response time. The impedance changes between the electrodes and human skin due to sweating or fatigue is the main drawback of this method. Vibrotactile feedback devices use commercial vibrators, as the ones used in cellphones, or specially designed vibrators. The tactile information is delivered by the strength, frequency, duration, and location of the vibrators [3]. The main limitation of this method is the amount of information that can be delivered. The mechanotactile feedback devices normally use commercial servomotors to apply forces to human skin [4]. The design space to deliver information is the strength and frequency of pushing forces. The main drawback of this method is the relatively long response time. There are also various other sensory substitution devices designed using air pressure [6], thermal [7], or audio [8] as feedback media. Although non-invasive feedback devices built by various

* Corresponding author. Tel.: +41 32 321 67 35.
E-mail address: tao.li@bfh.ch

1877-7058 © 2016 The Authors. Published by Elsevier Ltd. This is an open access article under the CC BY-NC-ND license (http://creativecommons.org/licenses/by-nc-nd/4.0/).
Peer-review under responsibility of the organizing committee of the 30th Eurosensors Conference
doi:10.1016/j.proeng.2016.11.457

single feedback modalities have been studied, tactile feedback devices that combines multiple feedback modalities are still not common. It is unclear whether a multimodal tactile feedback device can provide tactile information more intuitively than one with only a single modality.

We believe that a mutimodal tactile feedback device can provide tactile feedback more intuitively. Human skin has four known types of mechanoreceptors to detects to external pressure, stretch, and vibration. Each type of mechanoreceptors has different characteristics in terms of adaption rate, receptor field size, and receptor density [2]. For instance, Pacinian corpuscles are sensitive to vibration but almost unresponsive to a steady pressure. Meanwhile the vibration sensation is poorly localized. In contrast, the Ruffini corpuscles respond best to low frequency pressures. Therefore, there are potentially four different channels to transfer tactile information. However current noninvasive tactile display devices use either vibration or pressures only [5], thus limit the band width to transfer tactile information.

2. Actuator concept

The conceptual design of the multimodal tactile feedback actuator is shown in Fig. 1. The actuator mainly consists of two servomotors and a vibrator. We use a cylindrical vibrator as both the source of vibration and the pressure-generating effector.

3. Design and fabrication

The designed actuator posses both mechanotactile and vibrotactile modalities. To select a proper mechanotactile actuator, both commercially rotary and linear servomotors were evaluated based on size and weight constrains. A small linear servomotor with a weight of 2.9 grams was chosen to convey mechanotactile sensation using a gentle pressure. This servomotor is normally used in the steering unit of remote control helicopters and light weight foam aircrafts. It has a low price tag and generates force by a miniature internal spindle. To achieve intuitive vibrotactile stimulation, the desirable vibration frequency is about 250Hz to stimulate the Pacinian corpuscles [2]. A cylindrical eccentric rotating mass (ERM) vibrator, commonly used in electric toothbrushes and vibrating touch interfaces, was selected.

The designed miniature actuator is shown in Fig. 2, which mainly consists of two servomotors and one cylindrical vibrator to simultaneously deliver vibration and pressure. The cylindrical vibrator serves as the effector of the designed multimodal actuator.

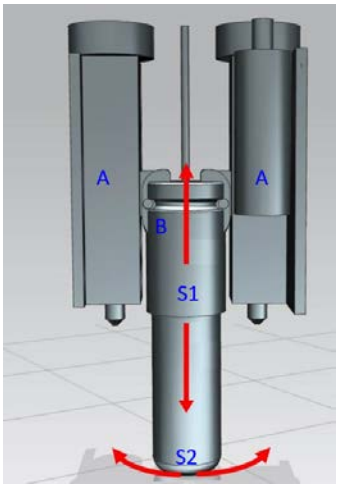

Fig. 1. The concept of multimodal actuator. It consists of two (A) servomotors to produce (S1) pressure and a (B) vibrator to generate (S2) vibration simultaneously.

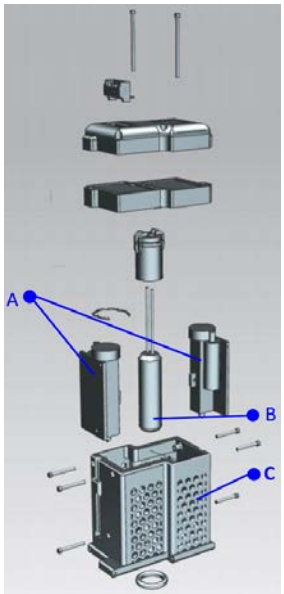

Fig. 2. Explosion view of the designed multimodal actuator. It mainly consists of (A) two servomotors, (B) a cylindrical vibrator, and (C) the 3D-printed actuator housing.

3.1. Specification

We performed various tests with the designed actuator, the specification and characterization of the multimodal tactile feedback actuator is summarized in Table 1.

Table 1. Specification of the multimodal actuator.

Parameters	Values
Modalities	vibration, pressure
Size	47.5 * 12 * 27 mm
Weight	30 gram
Power consumption	1.5 W
Input voltage	3.2 4.2 VDC
Max vibration frequency	240 Hz
Max pressure	4.4 N
Max stroke	6.5 mm

4. Application

To demonstrate its application, the designed multimodal tactile actuator is used to build a 2D tactile display array, which is to be applied at human body surface. The tactile feedback device contains 15 multimodal actuators and thus has a large design space to flexibly create rich tactile feedback patterns. The tactile display array is shown in Fig. 3.

5. Conclusion and discussion

We have designed a multimodal tactile feedback actuator by combining servomotors and cylindrical vibrators. The designed actuator is light weight, small, and power efficient. The multimodal actuator provides a new tool to the

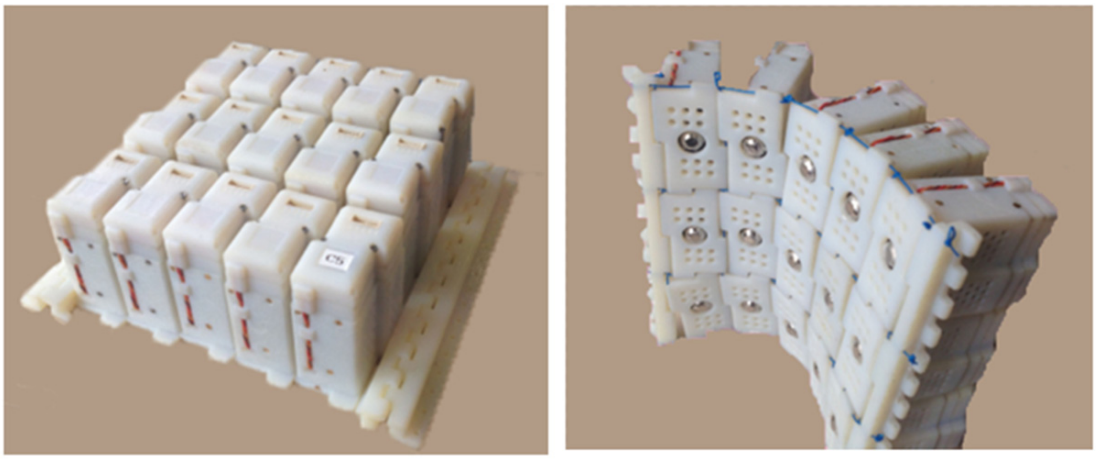

Fig. 3. A flexible multimodal tactile display array made by 15 independently controlled actuators. The device can display a large number of 2D tactile patterns. The flexible structure enables the device to fit to human body properly.

limited options to design tactile feedback interfaces. It might be proven to be a better alternative to popular single modal tactile feedback actuators. Further validation studies are planned with human subjects.

Acknowledgements

The authors would like to thank Mr. Gerhard F. Kuert for fabricating the actuator prototype.

This study was Funded by Nano-Tera.ch, financed by the Swiss Confederation, and scientifically evaluated by the SNSF under the RTD WiseSkin Project (Grant No. 20NA21_ 143070).

References

[1] M. Kasuya, M. Seki, K. Kawamura, Y. Kobayashi, M. G. Fujie, H. Yokoi. Robust grip force estimation under electric feedback using muscle stiffness and electromyography for powered prosthetic hand. 2013 IEEE International Conference on Robotics and Automation, 2013, 93-98

[2] W. F. Boron, E. L. Boulpaep, Medical physiology: a cellular and molecular approach, Saunders/Elsevier, 2009.

[3] S. Choi, K. J. Kuchenbecker. Vibrotactile Display: Perception, Technology, and Applications. Proceedings of the IEEE, 2013, 101, 2093-2104

[4] C. Antfolk, C. Balkenius, G. Lundborg, B. Rosn, F. Sebelius. Design and technical construction of a tactile display for sensory feedback in a hand prosthesis system. Biomed Eng Online, 2010(9) 50

[5] C. Antfolk, M. DAlonzo, M. Controzzi, G. Lundborg, B. Rosn, *et. al.*, Artificial redirection of sensation from prosthetic fingers to the phantom hand map on transradial amputees: vibrotactile versus mechanotactile sensory feedback. IEEE T Neur Sys Reh, 21(1) (2013): 11220.

[6] C. Antfolk, A. Bjrkman, S.-O. Frank, F. Sebelius, G. Lundborg, B. Rosen. Sensory feedback from a prosthetic hand based on air-mediated pressure from the hand to the forearm skin. J Rehabil Med, 2012(44), 702-707

[7] M. C. Jimenez, J. A. Fishel. Evaluation of force, vibration and thermal tactile feedback in prosthetic limbs. 2014 IEEE Haptics Symposium (HAPTICS), 2014, 437-441

[8] J. Gonzlez, W. Yu, A. H. Arieta. Multichannel audio biofeedback for dynamical coupling between prosthetic hands and their users. IND ROBOT, 2010(37), 148-156

[9] W. Strunk Jr., E.B. White, The Elements of Style, third ed., Macmillan, New York, 1979.

[10] G.R. Mettam, L.B. Adams, How to prepare an electronic version of your article, in: B.S. Jones, R.Z. Smith (Eds.), Introduction to the Electronic Age, E-Publishing Inc., New York, 1999, pp. 281–304.