Treatment of micropollutants in municipal wastewater:

Ozonation or activated carbon?

J. Margot[1], C. Kienle[2], A. Magnet[3], M. Weil[4], L. Rossi[1], L.F. de Alencastro[1], C. Abegglen[5], D. Thonney[3], N. Chèvre[6], M. Schärer[7], D.A. Barry[1]

[1] Ecole Polytechnique Fédérale de Lausanne (EPFL), Switzerland (jonas.margot@epfl.ch); [2] Swiss Centre for Applied Ecotoxicology, Eawag/EPFL, Switzerland ; [3] Wastewater treatment plant of Lausanne, Switzerland ; [4] ECT Oekotoxikologie GmbH, Germany ; [5] Swiss Federal Institute of Aquatic Science and Technology (Eawag), Switzerland, [6] University of Lausanne, Switzerland; [7]Federal Office for the Environment (FOEN), Switzerland

Introduction & Objectives

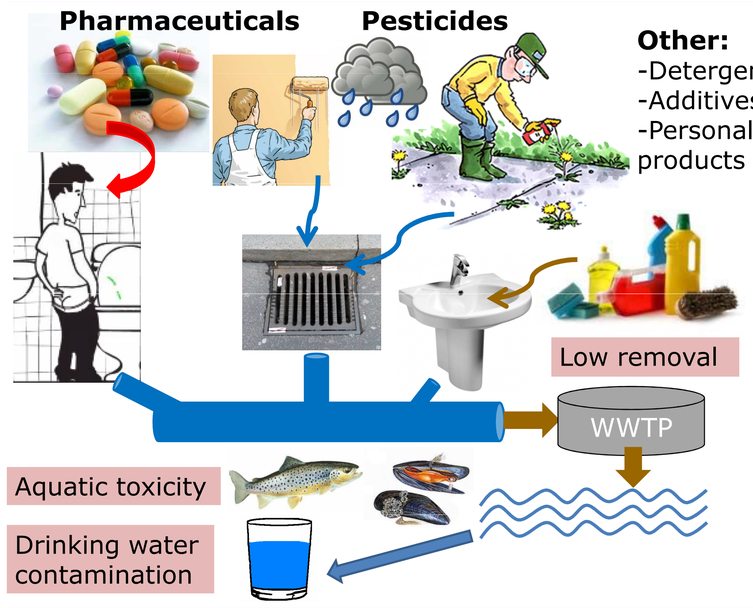

Other:
-Detergents
-Additives
-Personal care products

Micropollutant treatment is necessary

Objectives

To evaluate the efficiency of:

1. **Ozonation**
2. **Activated carbon adsorption**

to reduce wastewater micropollutant concentrations and toxicity, at large scale, in real conditions

Pilot plants at Lausanne municipal WWTP, Switzerland

Ozonation – sand filter (SF) pilot system (capacity 100 l/s)

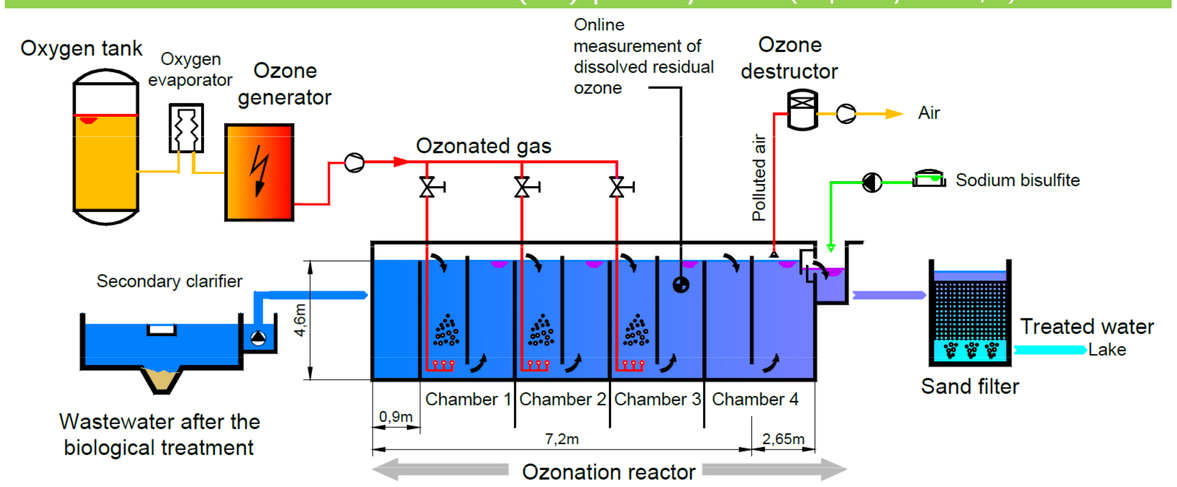

Figure 1. *Ozone, produced from pure oxygen, is injected into wastewater to oxidize organic substances (contact time: > 20 min, dose: 1 to 15 mg O_3/l). The reactor is followed by a biologically active sand filter (SF) to remove the readily biodegradable reaction products*

Powdered activated carbon–ultrafiltration system (PAC-UF) (capacity 10 l/s)

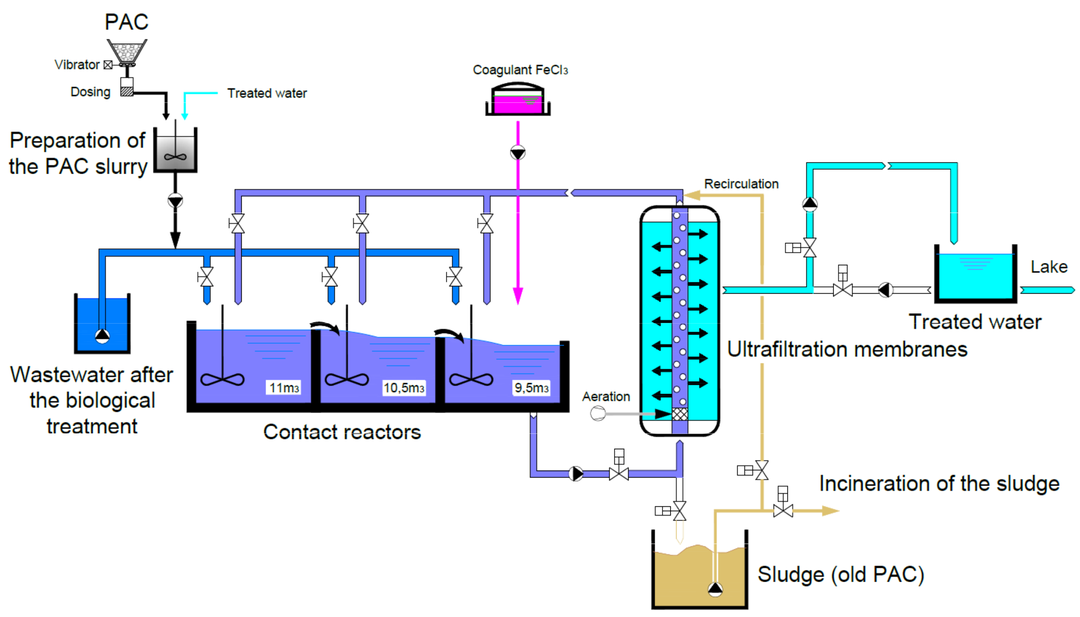

Figure 2. *PAC slurry is introduced into wastewater (10 to 20 mg/l) to adsorb the micropollutants. After a sufficient contact time (> 30 min), water is filtered with either ultrafiltration membrane (pore size of 30 nm) or sand filter and the retained PAC is reinjected in the contact reactor to obtain a sludge age of 2 d. Saturated PAC is finally incinerated with the adsorbed pollutants*

Efficiency monitoring

- 28 **sampling campaigns** before and after each treatment during 1 y
- 58 potentially **problematic substances** (36 pharmaceuticals, 13 biocides and pesticides, 2 corrosion inhibitors and 7 endocrine disruptors) analysed
- A large battery of **ecotoxicological tests** performed before and after each treatment:
  - 16 *in vitro* assays: mutagenicity, genotoxicity, estrogenicity and other hormonal effects
  - 9 *in vivo* assays: **acute toxicity** on bacteria and fish (*Vibrio fischeri, Danio rerio*), **chronic toxicity** on algae, aquatic plants, crustaceans, gastropods, worms and fish (*Pseudokirchneriella subcapitata, Lemna minor, Ceriodaphnia dubia, Gammarus fossarum, Potamopyrgus antipodarum, Lumbriculus variegatus, Oncorhynchus mykiss*)

This study was conducted by the sanitation service of the city of Lausanne, mandated by the Swiss Federal Office for the Environment (FOEN), with the support of the canton of Vaud

Results & Discussion

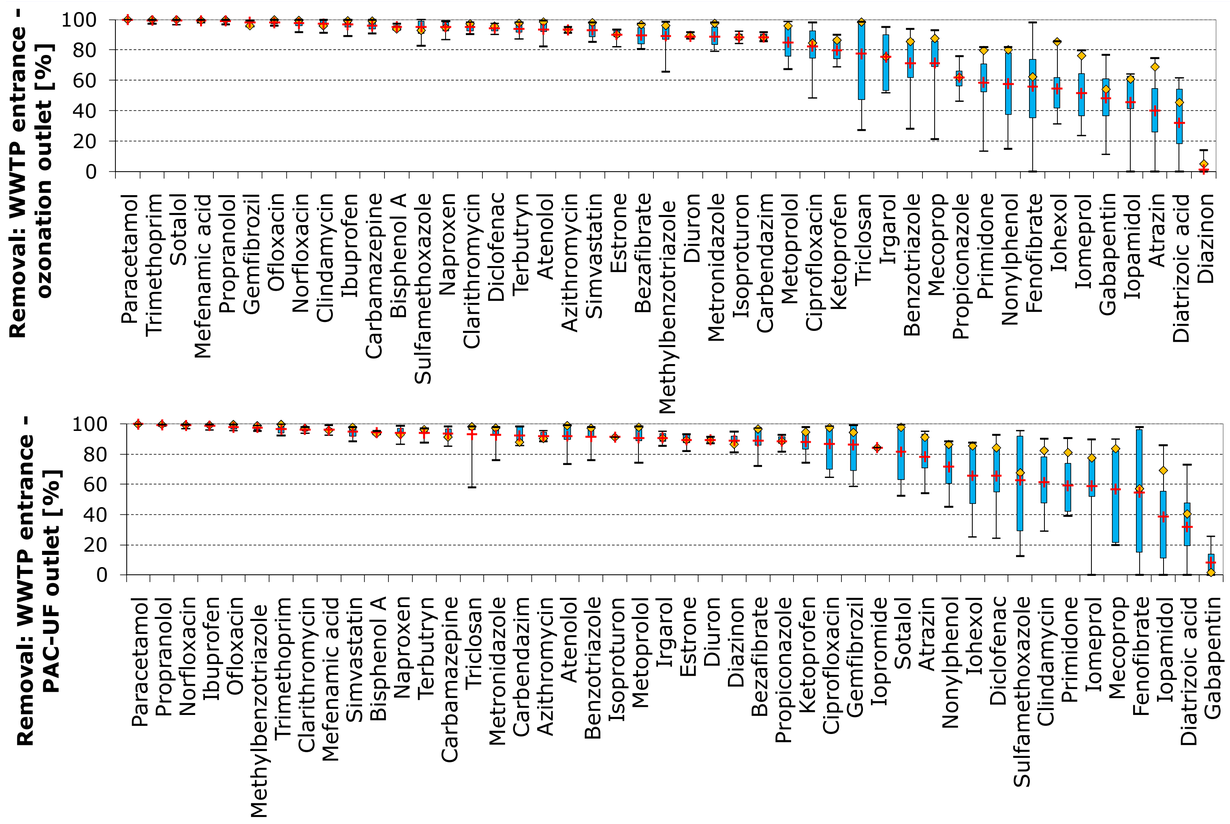

Figure 3. *Elimination of micropollutants between the WWTP entrance and the outlet of either the ozonation (3 to 7 mg O_3/l, top chart) or the PAC-UF treatment (10 to 20 mg PAC/l, bottom chart). Boxplot with the minimum/maximum, the quartile and the mean (+) of 12 analyses. The diamond (◊) represents optimized operational conditions (6.7 mg O_3/l or 20 mg PAC/l)*

- On average, **same efficiency for both treatments** (> 80% removal)
- Some substances better eliminated with one or the other treatment
- Some substances not well eliminated with both treatments in the tested conditions: e.g. X-ray contrast media or gabapentin
- **Clear toxicity decrease** during ozonation and PAC-UF for most of the bioassays
- Effluents of the advanced treatments are **not toxic** in most of the tests

Comparison: Ozone & Activated Carbon

Criteria	Ozone + SF	PAC + UF	PAC + SF
Measured/estimated on the pilot systems			
Micropollutants removal [a]	> 80% on average (with 5.5 g O_3/m³). Substances not completely degraded (by-product formation)	> 80% on average (with 10 to 20 g PAC/m³). If PAC is incinerated, substances are completely destroyed	
Toxicity reduction [a]	Good (> 80% in most *in vitro* bioassays)	Very good (> 90% in all *in vitro* bioassays)	Not tested
Water disinfection	Yes, partially	Yes, totally	No
Improving other water quality parameters	Yes, due to the sand filter	DOC reduction due to the PAC and strong global improvement due to the membranes	DOC reduction due to the PAC and global improvement due to the sand filter
Waste production	No	Increase by 10% the sludge production of the WWTP	
Electricity consumption	0.11 kWh/m³	0.50 - 0.90 kWh/m³ [c]	0.08 kWh/m³
Operation cost (€)[b]	ca. 3 to 4 cents/m³	ca. 20 to 30 cents/m³ [c]	ca. 4 to 5 cents/m³
Investment cost (€)[b]	ca. 10 cents/m³	ca. 15 to 30 cents/m³	ca. 7 to 10 cents/m³
Footprint	ca. 1000 m²/(m³/s)	ca. 5000-7000 m²/(m³/s)	ca. 1400 m²/(m³/s)
General considerations			
Risks for the staff	Need trained staff (toxic substance). Safety system required	Low risk	
Risks for the environment	Risk of forming potentially toxic by-products	Technique unsuitable in case of land application of the sewage sludge. PAC production can have significant environmental impacts	
Type of WWTP that can use this process	Need permanent and trained staff	Implementation possible in all types of WWTP	

[a] Including biological treatment [b] Based on local Swiss costs
[c] Complementary tests with other membrane configurations show that this value could be divided by 2 or 3

Conclusions

- Both processes (ozonation and PAC addition) are **effective** in reducing the toxicity and the release of micropollutants into surface waters
- Ozonation-SF and PAC-SF proved to be **feasible** in terms of implementation and operation at large-scale in WWTP, for relatively similar investment and operation costs
- The energy requirement and the cost of the global wastewater treatment would increase by 20 to 30%
- Each process has its **advantages and disadvantages**. The selection of one solution should be made case by case for each WWTP depending on the local constraints (space, security, energy cost, sludge disposal process, size of the plant, need for disinfection, wastewater composition, effluent quality, etc.)

Reference: Margot, J., Kienle, C., Magnet, A., Weil, M., Rossi, L., de Alencastro, L.F., Abegglen, C., Thonney, D., Chèvre, N., Schärer, M., Barry, D.A. 2013: Treatment of micropollutants in municipal wastewater: Ozone or powdered activated carbon? Sci. Total Environ. 461–462, 480-498.

November 2013