Raman-assisted DPP-BOTDA sensor employing Simplex coding with sub-meter scale spatial resolution over 93 km standard SMF

Mohammad Taki*[a], Marcelo A. Soto[a,b], Gabriele Bolognini[c] and Fabrizio Di Pasquale[a]
[a] Scuola Superiore Sant'Anna, TeCIP Institute, via G. Moruzzi 1, 56124 Pisa, Italy
[b] Current address EPFL Swiss Federal Institute of Technology, Institute of Electrical Engineering, SCI-STI-LT, Station 11, 1015 Lausanne, Switzerland
[c] Consiglio Nazionale delle Ricerche, IMM Institute, via P. Gobetti 101, 40129 Bologna, Italy
*E-mail: m.taki@sssup.it

ABSTRACT

Differential pulse-width-pair BOTDA technique is combined with bi-directional Raman amplification and Simplex coding to achieve sub-meter spatial resolution over very long sensing distances. Numerical simulations are used to optimize the power levels of the Raman pumps, avoiding nonlinear effects and pump depletion. Distortions in the Brillouin gain spectrum due to acoustic-wave pre-excitation are also avoided by numerical optimization of the pulse width and duty cycle of return-to-zero Simplex coding, providing significant SNR enhancement. We demonstrate 50 cm spatial resolution over 93 km of standard SMF with a strain/temperature accuracy of 34με/1.7 °C, respectively.

Keywords: fiber optic sensors, Brillouin scattering, Raman scattering, temperature sensing, strain sensing.

1. INTRODUCTION

Brillouin optical time domain analysis (BOTDA) has became one of the most adopted approaches in distributed sensing due to its capability of measuring strain and temperature simultaneously. The possibility of this technique to achieve long sensing ranges with high spatial resolution using standard single-mode fiber (SMF) enables many practical applications in structural health monitoring and civil engineering. In some applications, such as crack detections in large civil structures, spatial resolution values ranging in the cm-scale are required over a few kilometers distance. Other industrial fields, like pipelines monitoring in the oil&gas industry, would strongly benefit from temperature and strain distributed sensing capabilities over tens or hundreds of km SMF with tens of cm spatial resolution. However, spatial resolution in standard BOTDA systems is limited to 1 m due to the acoustic-phonon lifetime (~10 ns), inducing a broadening of the Brillouin gain spectrum when pulse widths shorter than 10 ns are used, thus leading to reduction of Brillouin peak gain [1] and to inaccuracies in Brillouin frequency shift (BFS) measurements. In order to achieve spatial resolutions smaller than 1 m, one promising technique is given by BOTDA employing differential pulse-width pair (DPP–BOTDA). DPP-BOTDA has been successfully employed to attain sub-meter spatial resolution [1-3], although typically exhibiting limited sensing ranges due to a rather poor signal-to-noise (SNR) induced by the DPP subtraction process. Optical pulse coding has been applied to DPP-BOTDA [1,2] overcoming the SNR limitations, in order to achieve longer distances. On the other hand, an effective technique, based on bi-directional Raman amplification, has been applied in standard BOTDA to extend the sensing range over 120 km distance, although with spatial resolutions of the order of 2 meters [4].

In this paper we propose to apply low-RIN bi-directional Raman amplification in combination with optical pulse coding to DPP-BOTDA schemes, thus providing distributed sensing over long sensing ranges together with sub-meter spatial resolution values. An effective implementation of such a sensor scheme is achieved through numerical optimization of the experimental test-bed. In particular, numerical simulations have been carried out in order to optimize all the coded Raman DPP-BOTDA system parameters in terms of pump-probe power levels, intensity noise (RIN) transfer to the probe signal, as well as in terms of modulation format. By combining the use of a return-to-zero (RZ)-format Simplex-coded DPP-BOTDA together with optimized low-RIN bi-directional Raman amplification, we finally experimentally demonstrate long-range distributed measurements over ~93 km of SMF, achieving 50-cm spatial resolution and worst-case strain-temperature resolutions of 34με - 1.7°C respectively.

OFS2012 22nd International Conference on Optical Fiber Sensors, edited by
Yanbiao Liao, Wei Jin, David D. Sampson, Ryozo Yamauchi, Youngjoo Chung, Kentaro Nakamura, Yunjiang Rao,
Proc. of SPIE Vol. 8421, 84219M · © 2012 SPIE · CCC code: 0277-786/12/$18 · doi: 10.1117/12.970299

2. THEORY AND OPTIMIZATION PROCESS

In stimulated Brillouin scattering (SBS) two narrow-linewidth (Stokes and anti-Stokes) waves are generated into an optical fiber. The SBS resonance frequency, so-called Brillouin frequency shift (BFS), is a temperature- and strain-dependent parameter that offers an interesting mechanism for distributed sensing. The BFS can be estimated along the optical fiber, providing information about the local temperature and strain at every position of the fiber. In the BOTDA technique, two counter-propagating signals at different frequencies (a pulsed pump and a CW probe wave) are used to induce Brillouin amplification. Thus, by sweeping the frequency difference between pulsed and probe signals the Brillouin gain spectrum (BGS) can be measured at every fiber position, giving the information about the local BFS. Unfortunately, the spatial resolution, which is proportional to the pump pulse width, is limited down to 1 m due to the acoustic phonon lifetime. If pulses shorter than the acoustic decay time are used, aiming at sub-meter resolution, a significant BGS broadening is induced, reducing the accuracy of the measurement system.

One of the methods to obtain sub-meter spatial resolution is DPP-BOTDA [1], in which the Brillouin spectra originating from two different pulses with slightly different widths are subtracted, so that the spatial resolution is given by the pulse widths difference rather than the used pulse widths. Thus, using pulse widths much longer than the acoustic-phonon lifetime the BGS broadening is avoided, providing at the same time high spatial resolution. However, the SNR resulting from the subtraction of two BGS is very low, leading to a reduced BFS measurement accuracy. Recently, the use of Simplex coding was applied to DPP-BOTDA to enhance the performance [2]; however, additional enhancement can be obtained if other methods, such as distributed optical amplification, are also combined. In particular, the use of Raman amplification for BOTDA system was proposed in [5]; note that its combination with coding techniques, such as Simplex codes, is not straightforward, due to the linear response required by the decoding process.

In this paper we effectively combine the use of Simplex coding with low relative-intensity noise bidirectional Raman amplification in a DPP-BOTDA system. To fully exploit the benefits of our technique, we have optimized the parameters for the pulse coding method and Raman amplification through numerical simulations based on a three-wave SBS transient model [2]. In particular, to avoid distortions due to acoustic-wave pre-excitation when using coding, Simplex codes must employ RZ-format pulses with an optimized duty cycle, allowing for a linear Brillouin amplification process that is independent of the coded bit sequences [2]. On the other hand, following the method proposed in [4], the power levels of the Raman pumps, Brillouin pump and probe light have been optimized through a spectral model of Raman amplifiers, describing the power evolution of both co- and counter-propagating waves along the sensing fiber [4]. Results of the simulations for the forward propagating signals point out that, by using power levels of 400 mW and 10 mW for the forward Raman pump and the coded Brillouin pump respectively, the Brillouin pump power at the fiber end is maximized, avoiding at same time nonlinear effects. The optimum power levels for the backward propagating signal can be found from the simulation contour plot reported in Fig. 1, showing that high optical SNR (OSNR) and a pump-probe power difference of 15 dB can be obtained with a probe power of -13 dBm and a backward Raman pump of 300 mW. In addition, while the use of a low-RIN backward Raman pump is critical in order to minimize the noise transfer to the probe signal, the RIN characteristics of the forward Raman pump do not play a key role and can be neglected in the simulations due to the low transferred noise in the backward Raman amplification process.

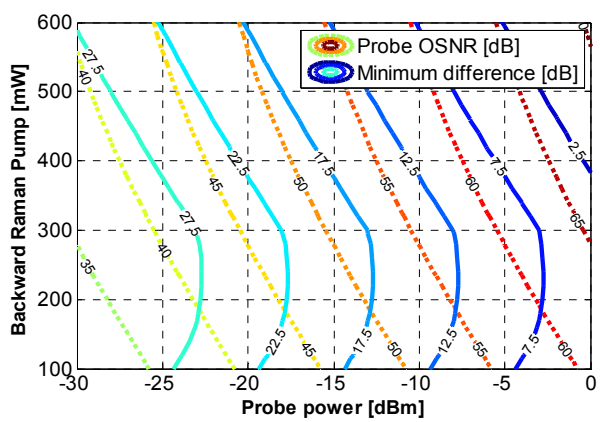

Figure 1. Simulation results for power optimization of both probe signal and backward-propagating Raman pump.

3. EXPERIMENTAL SETUP

The experimental setup is shown in Fig. 2. The output of a distributed feedback (DFB) laser is split into two (probe and pump) branches by a 3 dB coupler. In the probe (CW signal) branch a Mach-Zehnder modulator (MZM) is used to generate two sideband components suppressing at the same time the carrier frequency. A polarization scrambler is also used to depolarize the CW signal in order to reduce the polarization dependent gain (PDG), thus enhancing the performance of the sensor. A variable optical attenuator and an optical isolator are employed in order to adjust the amount of the optical probe power into the sensing fiber and to isolate the transmitter from the optical counter-

propagating components respectively. In the pump (pulsed beam) branch, an EDFA and an MZM driven by a waveform generator are used to amplify the DFB laser output and then to generate sequences of 127 bit Simplex optical codes. The position of the EDFA before the MZM avoids distortion in the codeword. A second polarization scrambler is used in the pump branch to depolarize the pump pulse signal. Bidirectional distributed Raman amplification has been implemented by coupling two Raman pumps at 1450 nm (in forward and backward directions) into a ~93 km single-mode fiber (SMF). A depolarized fiber Raman laser (FRL) is used as forward-propagating Raman pump, while the backward-propagating Raman pump has been implemented using two low-RIN polarization-multiplexed Fabry-Perot (FP) lasers (RIN< -130 dB/Hz), avoiding then probe signal fluctuations due to polarization-dependent Raman gain and pump to probe RIN transfer. At the receiver, a linear-gain EDFA is used as a preamplifier for the received traces. A circulator and a fiber Bragg grating (FBG, 6-GHz) have been used to filter out the preamplifier ASE noise, the residual suppressed carrier, the Brillouin anti-Stokes line and the Rayleigh signal. Finally, a 400 MHz PIN photo-receiver and an analog-to-digital converter (ADC) have been connected to a computer for trace acquisition.

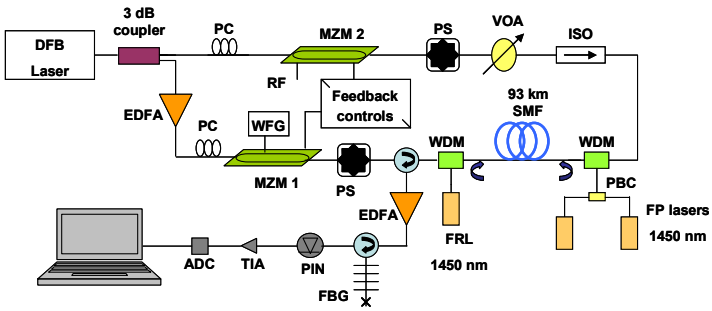

Figure 2. Experimental setup.

4. RESULTS

Following the results obtained by numerical optimization, in the setup of Fig. 2 the Brillouin pump has been intensity-modulated according to Simplex coding with 127 bit code length, using differential pulse-width pairs of 60/56 ns; note that the pulsed codewords have been obtained through a return-to-zero intensity modulation format with 120-ns bit slot and 50% duty cycle; this feature avoids patterning effects potentially arising from acoustic-wave pre-excitation in the de-coding process. The 4 ns pulse-width difference leads to a best-attainable spatial resolution of 40 cm. In the experiment we employed the optimized power levels resulting from simulations for Raman and Brillouin pumps, as well as for probe signal, avoiding nonlinear effect and minimizing pump depletion and the RIN impact. Note that, since the OSNR of the probe signal reaching the receiver is enhanced by the distributed fiber Raman amplification, we also observe higher SNR in the DPP-BOTDA-trace difference, with the possibility then to reach sub-meter spatial resolution over many tens of km of sensing fibers. The CW probe frequency is tuned through an RF signal generator, allowing one to acquire the whole Brillouin gain spectrum through the fiber length. At each frequency value, the coded traces for each pulsewidth value are decoded and the trace pairs are then subtracted as required in DPP scheme. The 93 km long sensing fiber is composed of three fusion-spliced fiber spools (25 km, 58 km and 10 km length), and is initially placed at room temperature (~27.5°C). The BGS obtained along the fiber length by the subtraction of differential pulsewidth is shown in Fig. 3; a small frequency difference (< 5 MHz) can be noticed in the BGS peak at about 25 km (see top view in Fig. 3b). This difference in BFS typically originates from slight non-uniformities in manufacturing parameters, which are common even in

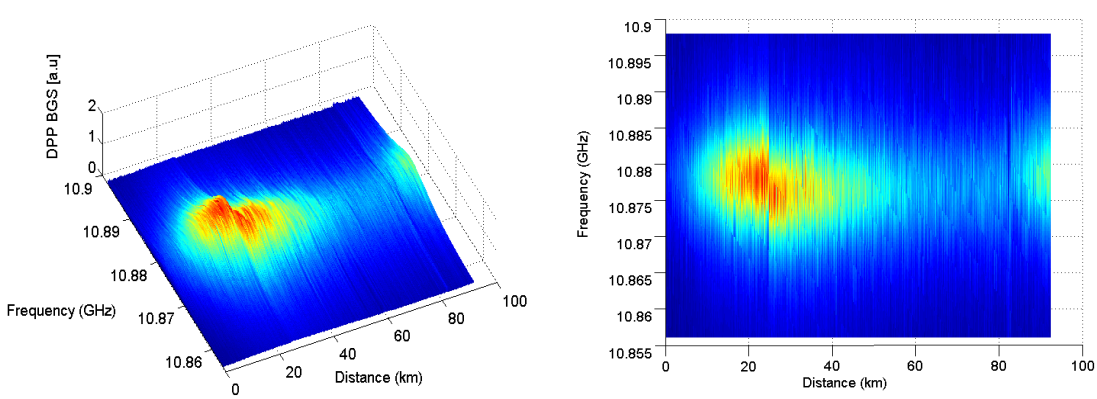

Figure 3. (a) Decoded BGS obtained by the DPP-BOTDA along the sensing fiber, and (b) top-view

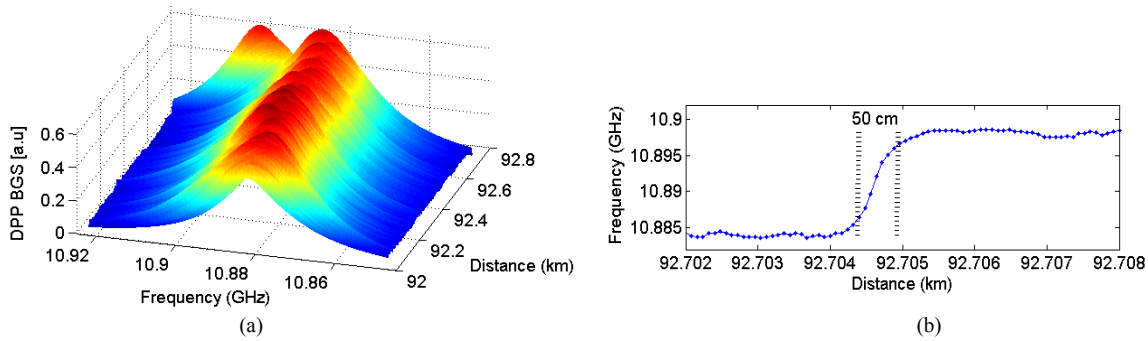

Figure 4. (a) Decoded BGS obtained DPP-BOTDA along the fiber end, (b) BFS parameter near fiber end.

different lots from a single fiber manufacturer. Considering that such a frequency difference is small in comparison to the BGS linewidth (~30 MHz), a continuous SBS interaction is then expected to take place along the whole fiber length, corresponding to the worst-case condition in terms of pump depletion and non-local effects. However, considering the used power values, and analyzing the spectral shape of the Brillouin gain throughout the fiber length, pump depletion effects can be considered as negligible. In order to verify the performance of the implemented sensor, 10 meters of fiber at ~92.7-km distance have been placed inside a temperature-controlled chamber (TCC), whose temperature has been set to 43°C, while the rest of the fiber is placed at room temperature (27.5°C). The BGS measurement versus distance (around the far fiber-end) is shown in Fig. 4a; in the figure, the BGS shift induced by heating can be clearly observed in the last few meters of fiber. By fitting the measured BGS profile with a Lorentzian curve, the BFS throughout the fiber length can be obtained. Fig. 4b shows the BFS (proportional to temperature variations) near the far fiber-end (92.7 km). In order to estimate the experimental spatial resolution, the step of the measured temperature variation is analyzed. The attained spatial resolution near the fiber end is indicated in Fig. 4b, resulting to be ~50 cm (10%-90% response of the BFS variation), which is close to the theoretical limit of 40 cm with the used DPP values. The attained temperature-strain resolution along fiber length can be calculated from the standard deviation in BFS measurements; the worst-case temperature (strain) resolution is observed at ~70 km distance, where the lowest OSNR is occurring due to minimum Raman amplification (see e.g. Fig. 3), and has been estimated to be ~1.7°C (~34 με). Note that the use of optimized Simplex-coded pulses in the RZ modulation format with 50% duty cycle avoids acoustic-wave pre-excitation and related penalties. Moreover, the optimization of the Raman pumps power levels, together with the low pump RIN, permits to have a small cross-talk due to RIN transfer in Raman amplification of the CW probe.

In conclusion, we implemented a DPP-BOTDA sensor aimed at long distance and sub-meter resolution employing a Simplex coded pump and low-RIN bi-directional Raman amplification. An optimization of the experimental conditions has been carried out through numerical simulations which allowed us to identify the optimum Brillouin and Raman gain distributions to maximize the received SNR, avoiding at the same time potential penalties due to RIN transfer, nonlinear effects and pump depletion. Experimental results on the optimized set-up have demonstrated distributed sensing over 93 km of standard SMF with 50 cm spatial resolution and strain/temperature accuracy of 34με/1.7 °C, respectively.

REFERENCES

[1] Liang, H., Li, W., Linze, N., Chen, L., and Bao, X., “High-resolution DPP-BOTDA over 50 km LEAF using return-to-zero coded pulses," Opt. Lett. 35(10), 1503-1505 (2010).

[2] Soto, M. A., Taki, M., Bolognini, G., and Di Pasquale, F., "Optimization of a DPP-BOTDA sensor with 25 cm spatial resolution over 60 km standard single-mode fiber using Simplex codes and optical pre-amplification," Opt. Express. 20(7), 6860-6869 (2012).

[3] Dong, Y., Bao, X., andd Li, W., “Differential Brillouin gain for improving the temperature accuracy and spatial resolution in a long-distance distributed fiber sensor,” App. Optics, 48(22), 4297-4301 (2009).

[4] Soto, M. A., Bolognini, G., and Di Pasquale, F., "Optimization of long-range BOTDA sensors with high resolution using first-order bi-directional Raman amplification," Opt. Express. 19(5), 4444-57 (2011).

[5] Rodriguez-Barrios, F., Martin-López, S., Carrasco-Sanz, A., Corredera, P., Ania-Castanón, J. Thévenaz, L., and González-Herráez, M., “Distributed Brillouin fiber sensor assisted by first-order Raman amplification,” J. Lightwave Technol. 28(15), 2162-2172 (2010).