Available online at www.sciencedirect.com

ScienceDirect

Energy Procedia 158 (2019) 4548–4553

Energy Procedia

www.elsevier.com/locate/procedia

10th International Conference on Applied Energy (ICAE2018), 22-25 August 2018, Hong Kong, China

Solid-oxide electrolyzer coupled biomass-to-methanol systems

Hanfei Zhang [a], Ligang Wang [b,c,*], François Maréchal [c], Umberto Desideri [a,*]

[a]Department of Energy, Systems, Territory and Constructions Engineering, University of Pisa, Largo L. Lazzarino, 56122 Pisa, Italy
[b]Group of Energy Materials, Swiss Federal Institute of Technology in Lausanne, Sion 1951, Switzerland
[c]Industrial Process and Energy Systems Engineering, Swiss Federal Institute of Technology in Lausanne, Sion 1951, Switzerland

Abstract

Biomass-derived fuels are attractive due to the reduced greenhouse gas emissions and the potential contribution to the development of the agricultural industry. Particularly, 2nd generation biofuels, e.g., synthetic biodiesel as a high-performance and alternative mobility fuel, can be produced via biomass-gasification based processes. There are mainly three types of biomass gasification processes: (1) moving- or fixed-bed gasifier for coal gasification with oxidizing blast gas (air + hot syngas) (2) fluidized-bed gasifier that uses air (oxidant agent) to fluidize the bed and the added carbon-containing particle, and (3) entrained flow gasifier that uses pure oxygen to reach high operating temperature. The entrained flow gasifier seems to be a promising choice with high scale-up potential, due to the high-pressure operation and none N_2 diluted syngas production, which can lead to the compact design of down-stream equipment. Particularly, the syngas produced contains no tar, and low methane and CO_2. The disadvantage of this gasification technology is the need of high-purity O_2 supply of, usually from an air separation unit (ASU). Therefore, solid-oxide electrolysis offers very good opportunity of integrating with entrained-flow gasifier, due to that (1) possible pure oxygen production to avoid the ASU, (2) high operating temperature for better heat integration with the original gasification process, and (3) hydrogen production via steam electrolysis for adjusting the syngas composition. In this paper, the integration of the SOE in the EFG-based biomass to methanol systems (SOEC case) is investigated and technically compared with the traditional biomass-to-liquid system (base case), whose syngas composition is adjusted by water-gas-shift reactors. The results show that, the mass yield of the methanol is set as around 69.4 t/hr, SOEC case can achieve higher energy efficiency, the energetic efficiencies of the base case and SOEC case were 47.95% and 59.1%, respectively.

Keywords: Biomass-to-methanol (BtM), Power-to-hydrogen (PtH), Hydrogen storage, Solid-oxide electrolysis (SOE), Entrained flow gasifier (EFG), Water-gas-shift (WGS), Methanol synthesis (MS);

10.1016/j.egypro.2019.01.755

Nomenclature

ASR	area specific resistance	M	syngas modular
Ecell	voltage of stack	$\dot{M}$	mass flow
Jcell	current density of stack	P_e	SOEC electrical power density
ΣP_j	sum of all electric power	WGS	water-gas-shift

1. Introduction

In recent years, due to the increase in fossil-fuel consumption and greenhouse gas emissions, and the rising global energy demand, new technologies for the generation of environmentally friendly power are needed [1,2]. Renewable energies such as wind and solar energy have great potential, for example, the target of renewable energy use in China has been set as 27% by 2020 [3]; Germany has the goal of generating 80% of its electricity from renewable energy sources by 2050 [1]. However, increasing the penetration of renewable energy is difficult due to the dynamic and intermittent nature and frequent mismatch of renewable-power supply and demand. The Power-to-hydrogen (PtH) technology might contribute to solving this issue as a means of energy storage for the excess renewable power generated. The core technology of power-to-hydrogen is the electrolyzer, which uses electrochemical methods to electrolyze water/steam into hydrogen and oxygen. one challenge for the PtH technology is the temporary hydrogen storage. Hydrogen-to-chemicals is a choice for hydrogen storage as hydrogen carriers, because of mature chemical product synthesis technology and high utility value. Among all possible chemicals generated, the methanol can be synthesized from CO and CO_2 hydrogenation. It is a key starting material for the production of many chemicals [4], mainly in the production of formaldehyde, MTBE (methyl tert-butyl ether), acetic acid, DEM (dimethyl ether) and olefin, etc. [5,6]. It also is an excellent fuel which can be used in a wide range of concentrations mixed with gasoline, from small concentrations where it is an additive up to high concentrations such as the M85 (15% gasoline and 85% methanol) [7].

In this paper, ASPEN Plus software was used to simulate solid-oxide electrolysis integrated biomass-to-methanol system and biomass-to-methanol with WGS reaction system. This paper is organized as follows: the SOEC case and base case were described in Section 2 with corresponding models developed and calibrated by experimental data and factory data (section 3). In section 4, the energy and exergy efficiency of the two systems were calculated and comparative discussion. Finally, the conclusions are drawn in Section 5.

2. Process description and model development

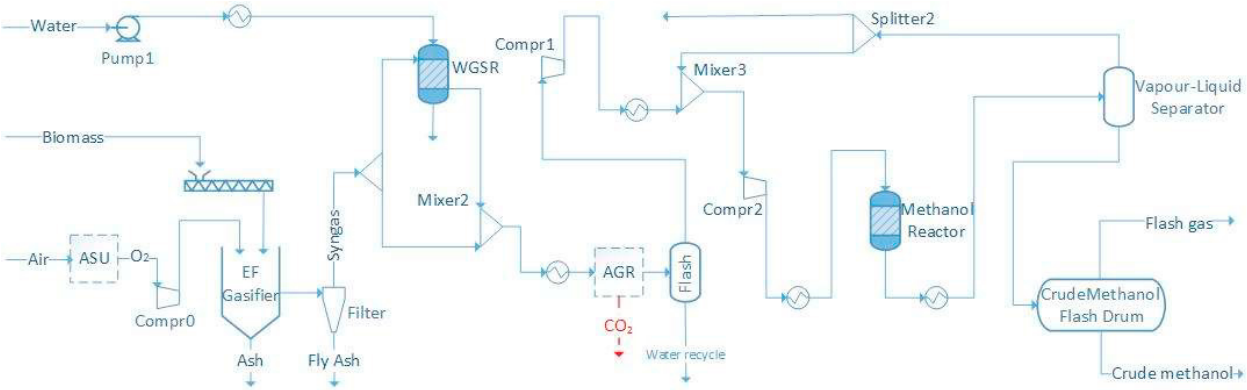

Figure 1. Base case: biomass-to-methanol with water-gas-shift reaction (WGSR).

In this section, the steady-state simulation models were developed using ASPEN PLUS software in PENG-ROB method, which is illustrated in Figure 1 and Figure 2. Two system concepts have been designed based on the entrained flow gasification and the low-pressure methanol synthesis. According to different methods of syngas-composition

adjustment, two main case studies are examined in detail: The base case is employing water-gas shift reactors while the SOEC case uses high-temperature steam electrolysis to product H_2, which is directly injected to the syngas for composition adjustment.

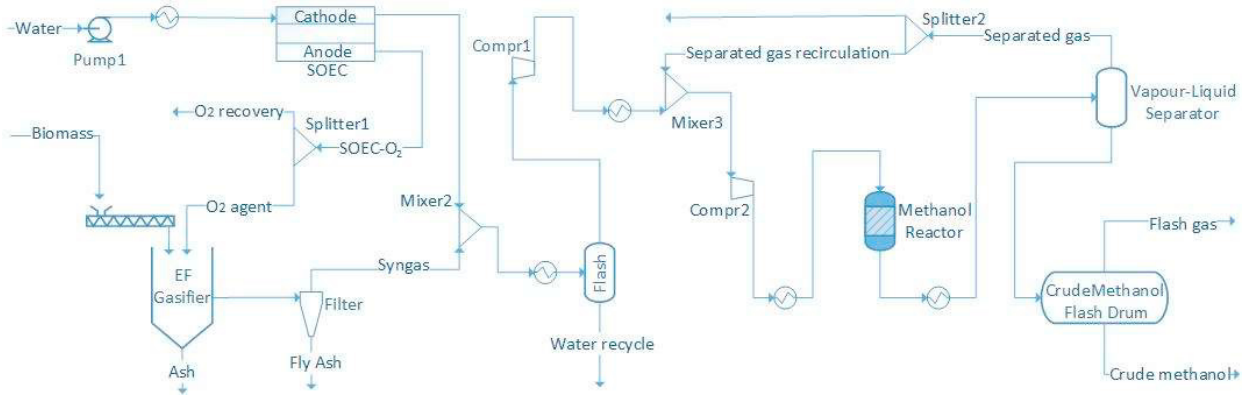

Figure 2. SOEC case: biomass-to-methanol with the SOEC (steam-electrolysis operation).

2.1. Biomass gasification process

Entrained-flow gasifier is employed with pure oxygen as the gasifying agent. For the base case, pure oxygen is produced by an air separation unit (ASU), a cryogenic distillation unit. The cryogenic distillation is the only commercially-available technology capable of economically producing large quantities of high-purity oxygen [8]. For the SOEC case, the pure oxygen as a by-product of the electrolysis is supplied to the entrained-flow gasifier.

The cryogenic ASU is modeled as a black-box by considering only the total electricity requirement, around 160 kWh/t [8].

For the modeling of the gasification process, Ryield and RGibbs models are employed to simulate EF gasifier, which is auto-thermally operated (20 bar, 1300 °C) with oxygen as gasification agent. The oxygen/biomass (O/B) ratio, which is defined as the ratio of the mass flowrates of oxygen over the biomass at the inlet stream of the gasifier. In this study, the O/B ratio is set as 0.4, according to [9]. The ultimae and proximate analysis of the fed biomass is referred to [9], as shown in Table 1.

Table 1. Ultimate and proximate analysis.

Material	Ultimate analysis (air-dried weight %)					Proximate analysis (air-dried weight %)				Heating value (kJ/kg)
	C	H	O	N	S	Moisture	Ash	Volatile	Fc	LHVb
Wood (sawdust)	48.88	6.29	33.59	1.7	0.06	4.79	4.69	72.29	18.23	18,313

2.2. Syngas adjustment

Usually, the syngas composition needs to be adjusted to satisfy the requirement of the methanol synthesis step. In Eq. (1), the module M is defined based on the molar fraction of H_2, CO, and CO_2 in the syngas:

$$M = \frac{y_{H_2} - y_{CO_2}}{y_{CO} + y_{CO_2}} \quad (1)$$

For the base case, the water gas shift (WGS) and CO_2 removal technologies are used to adjust the M factor. The water-gas shift reaction in Eq. (2) is modeled with chemical equilibrium under adiabatic condition (equilibrium reactor). The temperature and pressure of the reactor were chosen as 350 °C and 20 bar.

$$CO + H_2O \leftrightarrow H_2 + CO_2 \quad -\Delta H_{298K,0.1MPa} = 41.2 kJ/mol \tag{2}$$

The Acid Gas Removal (AGR) is also modeled as a black-box, considering only the heat requirement and the electricity consumption. The model is assumed as follows [10,11]: (1) a heat demand of the reboiler of 3.3 MJ/kg CO_2 separated at 150 °C, (2) 20% of the heat duty is recoverable between 90 and 40 °C, (3) pumping power consumption of amine solution of 25 kJ/kg CO_2 separated.

For the SOEC case, high-temperature electrolysis is used to produce H_2 to adjust SOEC case, as an alternative to the water gas shift reactor and, particularly, the oxygen can be used as the gasification agent of EF gasifier. A detail quasi-2D model for steam electrolysis is employed, developed and experimentally-calibrated as published in [12]. The key parameters of the SOEC's operating point employed in this paper are listed in Table 2.

Table 2. The operating parameters of the SOEC.

Parameter	Units	Value	Parameter	Units	Value
Temperature	°C	750	ASR	Ω.cm^2	0.401
Pressure	bar	20	Pe	kW	7.04
Ecell	V	1.413	H_2O inlet	kmol/hr	0.142
Jcell	A/cm^2	0.97	H_2 outlet	kmol/hr	0.092

2.3. Methanol synthesis

After composition adjustment, the syngas is compressed to the required pressure (56 bar), heated up to the required temperature (230 °C), and then sent to the methanol synthesis reactor with the reactions occurring as Eqs. (3) and (4). The raw methanol obtained is flashed before entering the crude methanol flash drum to reach a final methanol purity of crude methanol of 95%.

$$2H_2 + CO \leftrightarrow CH_3OH \qquad -\Delta H_{298K,0.1MPa} = 90.4\ kJ/mol \tag{3}$$

$$3H_2 + CO_2 \leftrightarrow CH_3OH + H_2O \qquad -\Delta H_{298K,0.1MPa} = 49.2\ kJ/mol \tag{4}$$

A low-pressure methanol synthesis process is simulated by Aspen Plus with the key technical specifications coming from a state-of-the-art methanol synthesis plant in China. The reactor is simulated by a stoichiometric reactor operated at 230 °C and 56 bar. The module factor M defined in Eq. (1) is controlled at 2.05.

3. Model calibration

3.1. Entrained flow gasification

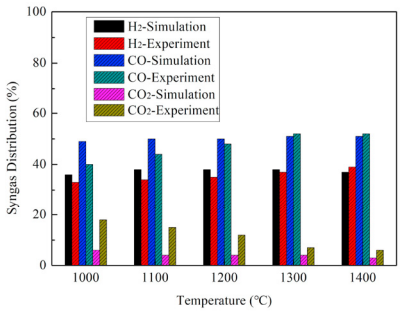

Figure 3 Comparison between the experimental [9] and simulated syngas composition (operation temperature from 1000 to 1400 °C and fixed O/R ratio of 0.4).

The entrained flow gasification model is calibrated with the experimental data published in [9], where the wood (sawdust) is used as the raw biomass feed, with the ultimate and proximate analyses shown in Table 1. Ultimate and

proximate analysis.. The simulation results are compared with experimental data in Figure 3 for different operating temperature from 1000 to 1400 ℃ and a fixed O/B ratio of 0.4. It is shown that a good agreement has been achieved in terms of H_2, CO, and CO_2 molar fraction, especially under the operating temperature of 1300 ℃.

Table 3. Comparison of syngas compositions.

	H_2	CO	CO_2	CH_4	N_2	Ar
Experiment	67%	29.76%	2.54%	0.07%	0.4%	0.23%
Simulation	67%	29.76%	2.54%	0.07%	0.63%	0

3.2. Low-pressure methanol synthesis

To simulate the methanol synthesis process reasonably, the data obtained from the industrial methanol synthesis process in China are used in this paper. The methanol production is 511.8 kt/year at a purity of CH_3OH over 95 wt%, which requires 7000 kmol/hr syngas feed (at 20 bar and 40 ℃), as given in in Table 3. The compressed, adjusted syngas is almost under stoichiometric for reactions (2) and (3). The reactor is operated with controlled feed conditions at 56 bar and 230.9 ℃. The comparison of the field data and simulation results with the relative deviations is given in Table 4, which shows good agreement as well.

Table 4. Comparison of the simulated and factory Results

	R[a]	Syngas flow (kmol/hr)	Crude methanol mass concentration (wt%)	Crude Methanol product flow (kg/hr)	Methanol Production (kt/year[b])
Factory	3.35	7000	95.98	71084	511.8
Simulation	3.28	7000	95.4	71044	511.5
Relative deviation %	2.08	-0.51	0.60	0.05	0.05

a. Recirculation ratio of the of recycles gas to fresh syngas; b. Annual service hours: 7200 hrs.

4. Results

The methanol synthesis process with a crude methanol production of 71 t/h was simulated in detail for both the base case and the SOEC case, respectively. The comparison of the performances of both cases is summarized in Table 5, where the energy (η) and exergy (ε) efficiencies are calculated by Eq. (5) and (6). The E_{Biomass} is calculated by Eq. (7) [13].

$$\eta = \frac{\dot{M}_{\mathrm{Methanol}} \cdot \mathrm{LHV}_{\mathrm{Methanol}}}{\dot{M}_{\mathrm{Biomass}} \cdot \mathrm{LHV}_{\mathrm{Biomass}} + \sum P_j} \cdot 100 \quad (5)$$

$$\varepsilon = \frac{\dot{M}_{\mathrm{Methanol}} \cdot \mathrm{E}_{\mathrm{Methanol}}}{\dot{M}_{\mathrm{Biomass}} \cdot \mathrm{E}_{\mathrm{Biomass}} + \sum P_j} \cdot 100 \quad (6)$$

$$E_{\mathrm{Biomass}} = \beta \cdot \mathrm{LHV}_{\mathrm{Biomass}} \quad (7)$$

Where $\dot{M}_{\mathrm{Methanol}}$ is mass flow of obtained methanol, $\mathrm{LHV}_{\mathrm{Methanol}}$ is low heating value of methanol, $\dot{M}_{\mathrm{Biomass}}$ is mass flow of Biomass feed, $\mathrm{LHV}_{\mathrm{Biomass}}$ is low heating value of biomass, E_{Methanol} is exergy rate of methanol, E_{Biomass} is exergy rate of biomass feed and $\sum P_j$ is the sum of all electric power. In the equations (7) β factor is expressed by Eq. (8) [13], which is the ratio of chemical exergy to the lower heating value of biomass.

$$\beta = \frac{1.041 + 0.216 \cdot Z_{\mathrm{H}}/Z_{\mathrm{C}} - 0.249 \cdot Z_{\mathrm{O}}/Z_{\mathrm{C}} \cdot (1 + 0.788 \cdot Z_{\mathrm{H}}/Z_{\mathrm{C}}) + 0.045 \cdot Z_{\mathrm{N}}/Z_{\mathrm{C}}}{1 - 0.304 \cdot Z_{\mathrm{O}}/Z_{\mathrm{C}}} \quad (8)$$

where Z_{H}, Z_{O}, and Z_{C} refer to the mass fraction of hydrogen, oxygen and carbon, respectively.

It is shown that even without waste heat recovery technologies, BtM has high energy efficiency; especially that of the SOEC case reaches up to 59.1%, about 11.1% higher than the base case. Table 5 shows that the biomass consumption of the SOEC case is only 51% of the base case for the same methanol production. This is mainly because (1) the SOEC case employs highly-efficient high-temperature electrolysis to convert electrical energy into hydrogen, reducing biomass consumption. (2) The base case employs AUS and AGR systems to produce O_2 and capture CO_2,

respectively. Only 40% of the oxygen produced by the SOEC is consumed by the gasifier; while, the remaining 60% can be delivered as an additional by-product. If the SOEC case is adopted, it can consume 242 MW of excess renewable electric energy, which can be regarded as a value of seasonal storage.

Table 5. Main performance indicators of both cases.

	Biomass feed (t/hr)	ASU power (MW)	Pump1 power (kW)	SOEC power (MW)	AGR power (MW)	Compressor power (MW)	Methanol production kg/hr	η (%)	ε (%)
Base case	151.9	8.16	100	——	0.61	19.53	69444	47.95	47.59
SOEC case	78.35	——	51	242	——	9.07	69444	59.1	61.1

5. Conclusions

In this paper, the biomass-to-methanol systems via entrained-flow gasification were proposed and assessed energetically with two methods for syngas adjustment: (1) biomass-to-methanol integrated with WGSR (base case), and (2) biomass-to-methanol integrated with SOEC (SOEC case). The mass yield of the methanol is set as around 70 t/hr for both cases. The energetic efficiencies of the base case and SOEC case were 47.95% and 59.1%, respectively. Due to that the SOEC case provides hydrogen instead of WGSR of base case, the biomass consumption of the SOEC case is only 51% of the base case. By the integrating SOEC, about 3.09 kw of renewable electricity can be stored for every 1 kg of methanol produced. There is a significant amount of heat available from the whole system, which requires the integration of various heat recovery technologies to further increase the overall-system efficiency.

Acknowledgments

The financial support by China Scholarship Council and the University of Pisa is gratefully acknowledged.

References

[1] Gerda Gahleitner. Hydrogen from renewable electricity: An international review of power-to-gas pilot plants for stationary applications. Hydrogen Energy 2013; 38: 2039-2061.
[2] Yun Zheng, Jianchen Wang, Bo Yu, et al. A review of high temperature co-electrolysis of H_2O and CO_2 to produce sustainable fuels using solid oxide electrolysis cells (SOECs): advanced materials and technology. Chemical Society reviews 2017; 46:1427-1463.
[3] The 13th Five-Year Plan for renewable energy development of China, National Development and Reform Commission of China, 12. 2016.
[4] Fujita S, Moribe S, Kanamori Y, Kakudate M, Takezawa N. Preparation of a coprecipitated Cu/ZnO catalyst for the methanol synthesis from CO_2-effects of the calcination and reduction conditions on the catalytic performance. Applied Catalysis A 2001; 207:121-128.
[5] Cheng, W. H., Kung, H. H., Eds. Methanol Production and Use. Marcel Dekker: New York, 1994.
[6] Gholamreza Moradi, Fereydoon Yaripour, Hossein Abbasian, Mostefa Rahmanzadeh. Intrinsic reaction rate and the effects of operating conditions in dimethyl ether synthesis from methanol dehydration. Korean Journal of Chemical Engineering 2010; 27: 1435-1440.
[7] Olah, G.A., Goeppert, A., Prakash, G.K.S., 2008. Chemical recycling of carbon dioxide to methanol and dimethyl ether: from greenhouse gas to renewable, environmentally carbon neutral fuels and synthetic hydrocarbons. The Journal of Organic Chemistry 74 (2), 487-498.
[8] Arthur Darde, Rajeev Prabhakar, Jean-Pierre Tranier, Nicolas Perrin. Air separation and flue gas compression and purification units for oxy-coal combustion systems. Energy Procedia 2009; 1: 527-534.
[9] Jinsong Zhou, Qing Chen, Hui Zhao, Xiaowei Cao, et al. Biomass–oxygen gasification in a high-temperature entrained-flow gasifier. Biotechnology Advances 2009; 27: 606-611.
[10] Stefan Heyne, Simon Harvey, Impact of choice of CO_2 separation technology on thermo-economic performance of Bio-SNG production processes. Energy Research 2014; 38: 299-318.
[11] Alberto Alamia. Thermo-economic assessment of CO_2 separation technologies in the framework of synthetic natural gas (SNG) production. Master thesis. Chalmers University of Technology. Göteborg, 2010.
[12] Ligang Wang, Mar Pérez-Fortes, Hossein Madi, et al. Optimal design of solid-oxide electrolyzer based power-to-methane systems: A comprehensive comparison between steam electrolysis and co-electrolysis. Applied Energy 2018; 211: 1060-1079.
[13] Yangyang Xiang, Jingsong Zhou, Bowen Lin. et al. Exergetic evaluation of renewable light olefins production from biomass via synthetic methanol. Applied Energy 2015; 157: 499-507.