Brillouin distributed fibre sensing using phase modulated probe

Xin Lu[1]*, Marcelo A. Soto[1], Miguel Gonzalez Herraez[2], Luc Thévenaz[1]
[1] EPFL Swiss Federal Institute of Technology, Institute of Electrical Engineering,
SCI STI LT, Station 11, CH-1015 Lausanne, Switzerland;
[2] Departamento de Electrónica, Universidad de Alcalá, Edificio Politécnico,
28871 Alcalá de Henares, Madrid, Spain
*E-mail: xin.lu@epfl.ch

ABSTRACT

A novel configuration for a Brillouin distributed sensor using a phase modulated probe is presented. It offers the combined advantages of a direct implementation using simple devices and a large immunity to noise, shifting the information from the baseband to a higher frequency, which substantially strengthens the robustness to perturbations, interferences and other optical coherent noises. It naturally facilitates the possibility to perform frequency-coding on the probe to realise dynamic and fast measurements, since all frequency tunings are realised at sub-GHz frequencies.

Keywords: Fibre optics, optical fibre sensors, distributed fibre sensing, Brillouin scattering, Brillouin distributed fibre sensing.

1. INTRODUCTION

Brillouin optical time domain analysis (BOTDA) is an attractive tool for distributed temperature/strain sensing. The measurand distribution along the fibre turns out to be linearly related to the local Brillouin frequency shift, which can be obtained by sweeping the frequency offset between a pump pulse and a counter-propagating continuous-wave probe. In its simplest configuration the spatial resolution is determined by the width of pump pulses and is limited to 1 meter [1]. Several schemes have been proposed to overcome this limitation in spatial resolution [2,3]. Meanwhile, BOTDA could be adapted to dynamic measurements, based on a frequency-to-intensity conversion by placing the probe frequency on the steepest section of the Brillouin gain spectrum (BGS) and monitoring instantaneous changes in the local gain [4,5].

The measurand uncertainty of such static sub-meter and dynamic measurements can increase considerably under low signal-to-noise ratio (SNR) conditions. Among other methods, self-heterodyne detection has been proved to be an efficient method to improve the SNR, by shifting the information from the baseband into an arbitrary higher frequency band much more immune to noise. This way a significant SNR improvement of 10.75 dB has been experimentally reported [6]. Additionally, self-heterodyne detection may offer the advantages of low-frequency scanning and of avoiding the optical narrowband filtering of unwanted optical signals.

In this paper, a novel scheme based on a phase-modulated probe (PMP) is proposed to further improve the SNR of distributed Brillouin fibre sensors. This configuration inherits the advantages of the standard self-heterodyne detection, while much gaining in simplicity and response optimization. It also shifts the information from the baseband into an arbitrary frequency band in the electrical domain, where a lower-frequency scanning can be implemented as well. Pump and probe waves both have a multi-line symmetric spectrum centred on the original laser frequency, while the sensing response is created by the spectral asymmetric response resulting from the gain/loss Brillouin spectra. This method can be applied to both static and dynamic measurements. It offers the advantage of creating only spectral lines that enter into the interaction, maximising response and minimising coherent noise, in contrast with the vector BOTDA [7] also based on probe phase modulation. The different approach in the hereafter proposed configuration suppresses this issue, simplifies the processing and brings a crucial advantage for real implementations.

2. THEORY

The principle of the phase-modulated probe configuration can be grasped from the spectral representation depicted in Fig. 1. The central frequency represents the original laser single frequency, from which all interacting signals are generated by modulation. In one channel an intensity modulator operated in suppressed carrier mode creates two

Fifth European Workshop on Optical Fibre Sensors, edited by Leszek R. Jaroszewicz, Proc. of SPIE Vol. 8794,
87943P · © 2013 SPIE · CCC code: 0277-786X/13/$18 · doi: 10.1117/12.2026792

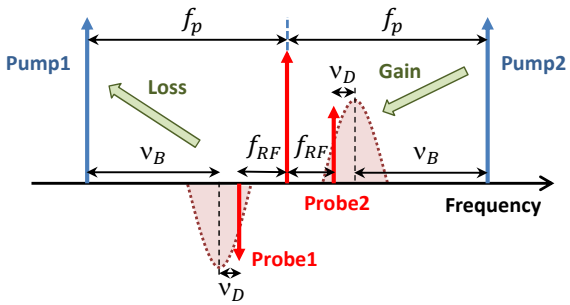

Figure 1. Principle of the phase-modulated probe (PMP) configuration. Pump and probe waves are both generated by simple modulation of the same single frequency laser: The pump is intensity-modulated and the probe phase-modulated.

symmetric pump lines, separated from the central frequency by a frequency f_p that must be a bit larger than the expected Brillouin shift. They are normally identically pulse-shaped.

In a second channel the original laser light is phase-modulated at some arbitrary frequency f_{RF}, which must be larger than the frequency response of the signal (essentially given by the spatial resolution, thus the pump pulse width), but with no other restriction. Typically, f_{RF} should lie between 200 MHz and 1 GHz in a classical sensing configuration. The first modulation sidebands create two probe waves with the same amplitude showing a π-phase difference and the frequencies f_p and f_{RF} are chosen so that these probe waves are distinctively positioned within the Brillouin gain spectrum of one pump line and the loss spectrum of the other pump line, respectively (see Fig. 1). Because the frequency difference of the pumps is small in the optical domain (~22 GHz), their corresponding Brillouin shifts ν_B can be considered as identical.

On the photodetector (PD), under pure phase modulation and in absence of gain and loss, no signal should be detected at frequency f_{RF}, as a result of the mutual beat cancellation due to the alternating phase between modulation sidebands. In presence of SBS interaction, each probe wave will experience an opposite amplitude change due to the distinct effect of gain and loss, as shown in Fig. 1. Thus, the perfect balance between sidebands leading to the mutual beat cancellation is broken and a signal will be then detected at frequency f_{RF}, being proportional to the amount of misbalance and thus to the strength of the interaction. Gain and loss here operate in a push-pull scheme to double the response due to the Brillouin interaction, resulting in a clear advantage with respect to the classical intensity configuration and even the self-heterodyne scheme. The information is given by the amplitude of the signal at frequency f_{RF} and can be extracted by electric heterodyne detection using a mixer or by a simple envelope detection using a microwave detector.

The probe sidebands interact with the pump pulses along the fibre, and the optical field at the detection is

$$E = -E_{SB}\left[1-L\left(-\nu_D\right)\right]\mathrm{e}^{j\varphi_L\left(-\nu_D\right)}\,\mathrm{e}^{j2\pi\left(\nu_0-f_{RF}\right)t} \quad + \quad E_0\,\mathrm{e}^{j2\pi\nu_0 t} \quad + \quad E_{SB}\left[1+G\left(\nu_D\right)\right]\mathrm{e}^{j\varphi_G\left(\nu_D\right)}\,\mathrm{e}^{j2\pi\left(\nu_0+f_{RF}\right)t} \tag{1}$$

where E_0 and E_{SB} are the complex amplitudes of the probe carrier and sidebands, respectively, ν_0 is the original laser frequency and f_{RF} is the phase modulation frequency, $\nu_0 \pm f_p$ are the frequencies of the two symmetric pumps, $\nu_D = f_{RF} - f_p + \nu_B$ is the detuning between probe frequency and Brillouin peak gain frequency, $G(\nu)$ and $L(\nu)$ are the amount of gain and loss centred at frequency $\nu_D = 0$, $\varphi_G(\nu)$ and $\varphi_L(\nu)$ are the phase shifts induced by Brillouin gain and loss. The real impulse response of the Brillouin gain and loss spectra makes the amplitude distribution symmetric, while the phase spectral distribution is anti-symmetric. The detected optical power at the frequency f_{RF} can be expressed as

$$P(f_{RF}) = 2\sqrt{P_0 P_{SB}}\left\{\left[1+G\left(\nu_D\right)\right]\cos\left[2\pi f_{RF}t+\varphi_G\left(\nu_D\right)\right]-\left[1-L\left(-\nu_D\right)\right]\cos\left[2\pi f_{RF}t-\varphi_L\left(-\nu_D\right)\right]\right\} \tag{2}$$

where P_0, P_{SB} are the optical powers of the probe carrier and sidebands, respectively. The phase differences between sidebands and carrier induced by dispersion turn out to be entirely negligible for such a small frequency difference, even for several hundreds of kilometre, which is a key advantage of this configuration. Eq. (2) confirms the mutually destructive beating between sidebands and carrier due to the π-phase difference between sidebands. No signal is therefore detected in absence of SBS interaction ($G = L = 0$); however, when one sideband gains energy, the other is equivalently attenuated, thus the detected response is given by the sum of their power change ($G + L$). In practical systems it is reasonable to consider that the 2 pump lines have identical powers and thus $G(\nu_D) = L(-\nu_D)$ considering their symmetric distribution, while the SBS nonlinear phase shifts experienced by the probes obey to the relationship $\varphi_G(\nu_D) = -\varphi_L(-\nu_D) = \varphi_{SBS}(\nu_D)$ regarding their anti-symmetric spectral property. This indicates that the PMP scheme does not introduce additional phase mismatch compared with a self-heterodyne detection, so that the PD output voltage can be expressed as a function of f_{RF}:

$$V = R_C P = V_{DC} + 2R_C\sqrt{P_0 P_{SB}}\left[G\left(f_{RF}\right)+L\left(f_{RF}\right)\right]\cos\left[2\pi f_{RF}t+\varphi_{SBS}\left(f_{RF}\right)\right] \tag{3}$$

where R_C is the PD responsitivity and V_{DC} is the direct-voltage component from the PD. The amplitude at frequency f_{RF} is obtained by demodulation or envelope detection.

The analysis above can be applied to the self-heterodyne situation just by assuming $G(f_{RF})$ or $L(f_{RF})$ equals to zero. Eq. (3) clearly shows that the PMP scheme enhances the signal voltage by a factor 2 when compared to a self-heterodyne detection, with essentially the same noise level, leading to a net 3 dB SNR improvement.

3. EXPERIMENTAL IMPLEMENTATION AND RESULTS

The experimental setup is depicted in Fig. 2. The light from a laser diode (λ=1551 nm) is divided into two branches by a 95:5 splitter. The upper branch is dedicated to the generation of pump pulses with high power and is fed by 95% of the original laser power. Two sidebands are generated by an intensity electro-optic modulator (EOM) driven by a microwave source at a fixed frequency of 11.3 GHz, while the carrier is suppressed by controlling the DC voltage. These sidebands are separated by 22.6 GHz and modulated by an optical shaper to form pulses; for this, another intensity EOM is used in the present case. Then the pump pulses are amplified by an erbium-doped fibre amplifier (EDFA) and their peak power is controlled by an attenuator. A polarisation switch is inserted to realise polarisation-independent measurements using a simple polarisation diversity technique. Finally, the pump pulses are launched into the sensing fibre through a circulator.

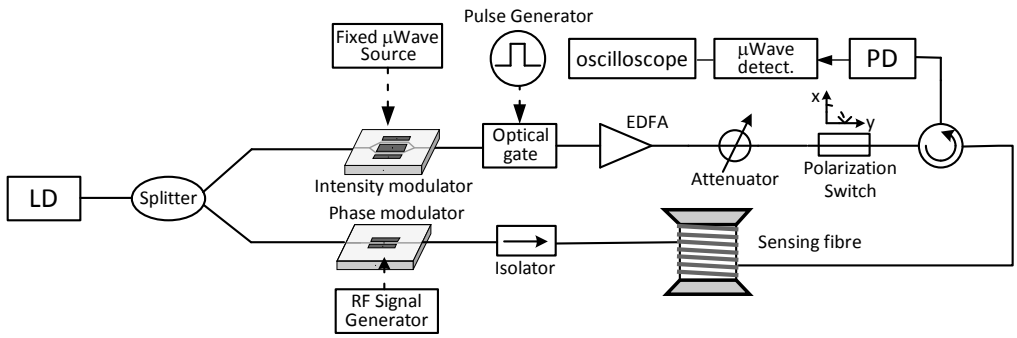

Figure 2. Experimental setup implementing the phase-modulated probe (PMP) scheme. The upper branch is the channel creating and shaping the dual frequency pump pulses while the lower branch realises the tuneable phase modulation of the probe.

In the lower branch conveying the smaller fraction of the original laser power (5%), the generation of the phase modulated probe is simply realised by a phase modulator driven by a simple synthesized RF generator. The 2 first sidebands of the phase modulated lightwave act as probes and the carrier can be here assimilated to the local oscillator (LO). By properly choosing the frequencies of the microwave fixed source and the RF generator, the probe sidebands are spectrally placed in a position suitable to scan the gain/loss Brillouin spectra generated by the twin pumps. In our implementation the SBS spectrum is obtained by scanning the RF signal from 500 to 700 MHz. After interacting with the pump pulses along the fibre, the PMP signal is detected by a 1 GHz bandwidth PD. Since the sensor response is contained in the amplitude of the RF fundamental component, a high-pass filter removes all low frequencies and DC components, while the limited PD bandwidth automatically filters out all RF overtones. A passive microwave detector then realises a phase-insensitive conversion of the RF fundamental into the baseband and the voltage can be classically acquired using an oscilloscope or any data acquisition card. For comparison purpose this set-up can easily be converted into a self-heterodyne detection system [6] by filtering out one of the pump line using a fibre Brag grating.

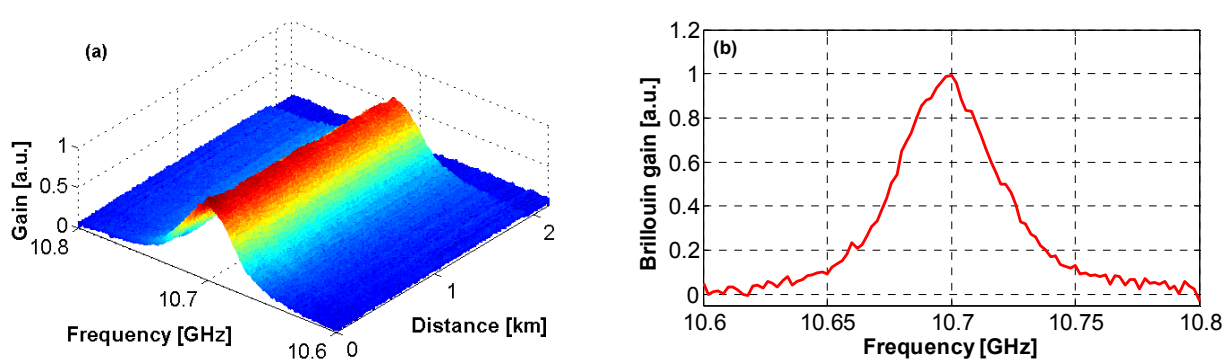

Figure 3. (a) Brillouin gain spectrum versus distance measured with the proposed phase-modulated probe configuration (using 2 m spatial resolution). (b) Respective Brillouin gain spectrum measured at 1 km distance.

To validate the concept of the proposed PMP scheme, the BGS over a 1.9 km-long fibre has been measured using a spatial resolution of 2 m and 500 time-averaged traces. Fig. 3(a) depicts the BGS as a function of distance measured with the proposed PMP configuration. It is clearly observed that very clean traces with no distortion are obtained, which is visually confirmed by the gain spectrum shown in Fig. 3(b) at 1 km distance. This demonstrates the large immunity of the technique to low frequency perturbations, such as interferometric noise due to spurious reflections, Rayleigh coherent noise from the pumps and other electric pick-ups. This is a direct consequence of the off-baseband detection at RF frequency. The Brillouin frequency shift along the fibre has been estimated by fitting a quadratic curve over the BGS [8] and is represented in Fig. 4. It has been verified that the oscillations of the Brillouin frequency observed in Fig. 4 are inherent to the fibre coiling and are reproducible. Using a standard deviation analysis, the accuracy in the Brillouin frequency shift has been estimated to be 0.15 MHz.

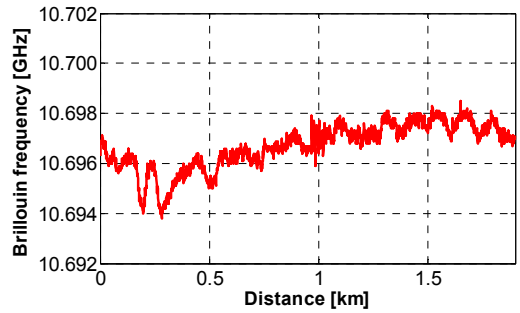

Figure 4. Brillouin frequency shift as a function of position retrieved from the BGS shown in Fig. 3(a).

4. CONCLUSIONS

A novel BOTDA configuration is proposed, exploiting phase modulation and the spectral anti-symmetry of the Brillouin gain/loss spectra generated by a pump line. Using 2 pump lines separated by more than twice the Brillouin frequency shift, changes in the probe amplitude due to the Brillouin interaction (gain/loss processes) are converted to a proportional intensity-modulated component in the RF electrical domain. This moves the information off the electric baseband that contains all the major noise perturbations, making the detected signal very clean, though at the expense of a slightly more complex detection stage. This brings a substantial bonus in term of SNR.

The PMP configuration only needs the most elementary electro-optic modulators and requires neither single-sideband modulation, nor optical spectral filtering to remove the unwanted spectral lines. The interacting signals are all spectrally symmetric, centred on the original frequency of the single laser source.

An identified drawback associated to this scheme is a larger sensitivity to pump depletion related to the existence of high power twin pump lines. This situation facilitates the generation of extra lines through four-wave mixing, with little alleviating impact from dispersion due to their spectral proximity, and was observed to moreover substantially lower the threshold for modulation instability. This probably disqualifies the technique for long range sensing, but it remains very attractive for short range and dynamic measurements based on a fast frequency coded probe, since all frequency-agile operations are now realised in the RF frequency range where suitable and affordable generators are available.

The authors would like to acknowledge the support from the company OMNISENS (Switzerland) and from the Swiss Commission for Technology and Innovation (Project 13122.1).

REFERENCES

[1] Thévenaz, L., “Inelastic Scatterings and Applications to Distributed Sensing”, in Advanced Fiber Optics - Concepts and Technology, pp. 263-307, EPFL Press, distributed by CRC Press, Lausanne, Switzerland (2011).

[2] Foaleng, S. M., Tur, M., Beugnot, J. C. and Thévenaz, L., “High Spatial and Spectral Resolution Long-Range Sensing Using Brillouin Echoes,” *J. Lightwave Technol.* 28(20), pp. 2993-3003 (2010)

[3] Li, W., Bao, B., Li, Y., and Chen, L., “Differential pulse-width pair BOTDA for high spatial resolution sensing,” *Opt. Express* 16(26), 21616-21625 (2008).

[4] Bernini, R., Minardo, A., and Zeni, L., “Dynamic strain measurement in optical fibers by stimulated Brillouin scattering,” *Opt. Lett.* 34(17), 2613-2615 (2009).

[5] Peled, Y., Motil, A., Yaron, L. and Tur, M., "Slope-assisted fast distributed sensing in optical fibers with arbitrary Brillouin profile," *Opt. Express* 19(21), 19845-19854 (2011)

[6] Zornoza, A., Sagues, A., and Loayssa, A., “Self-Heterodyne Detection for SNR Improvement and Distributed Phase-Shift Measurements in BOTDA,” *J. Lightwave Technol.* 30(8), 1066-1072 (2012).

[7] Dossou, M., Bacquet, D. and Szriftgiser, P., "Vector Brillouin optical time-domain analyzer for high-order acoustic modes," *Opt. Lett.* 35(22), 3850-3852 (2010)

[8] Thévenaz, L., and Soto, M. A., “Rating the performance of a Brillouin distributed fiber sensor,” *Proc. SPIE 8421, OFS2012 22nd International Conference on Optical Fiber Sensors*, 8421A7 (2012).