Polarization pulling based on stimulated Brillouin scattering in a dual-pump configuration

Zohar Shmilovitch[1], Avishay Eyal[1], and Moshe Tur[1]
Avi Zadok[2]
Nikolay Primerov[3], Sanghoon Chin[3], Luc Thevenaz[3]

[1]Faculty of Engineering, Tel-Aviv University, Tel-Aviv 69978, Israel
[2]School of Engineering, Bar-Ilan University, Ramat-Gan 52900, Israel
[3]Ecole Polytechnique Fédérale de Lausanne, Institute of Electrical Engineering, STI-GR-SCI Station 11, 1015 Lausanne, Switzerland

ABSTRACT

Stimulated Brillouin scattering (SBS) amplification of probe signals is highly polarization dependent. Maximum and minimum gain values are associated with a pair of orthogonal states of polarization (SOP) at the fiber output. Since the maximum gain is much higher than the minimum, the output probe SOP is pulled towards that of the maximum amplification. Polarization pulling is restricted, however, by pump depletion. In this work, we propose, analyze and demonstrate a method for enhanced SBS polarization pulling, using two orthogonal pumps: the one amplifies the probe wave whereas the other attenuates it. The method provides the same polarization pulling as that of a single amplifying pump, however it is considerably more tolerant to depletion.

Keywords: Stimulated Brillouin scattering (SBS); Polarization; Fiber-optic propagation; nonlinear fiber optics;

1. Introduction

Polarization control is of utmost importance in many sensing architectures, especially those using interferometry. In applications where the use of polarization maintaining fibers is not an option, one must resort to polarization diversity solutions or to active control of the state of polarization (SOP), using feedback systems. Recently, optical nonlinear interactions have been utilized to impose the SOP of one waveform on that of another[1]. Examples of such nonlinearly-mediated *polarization pulling* include the use of four-wave mixing[2,3], stimulated Raman scattering (SRS)[4], and stimulated Brillouin scattering (SBS)[5,6], where the latter is the effect used in this work. Potentially, nonlinear polarization pulling could allow for the all-optical synthesis of an arbitrary SOP.

Vector analysis of SBS reveals that at the undepleted pump regime, the probe wave amplification is analogous to that of an effective medium of polarization dependent gain (PDG)[5]. The SOP of a Stokes probe wave subject to SBS amplification is drawn towards a particular state, whereas the SOP of an attenuated anti-Stokes wave is repelled from the same state. In standard, weakly birefringent fibers, that 'focal' SOP of the probe wave is represented by a Jones vector which is the complex conjugate of that of the input pump[5]. The effectiveness of polarization pulling is determined by the ratio of the maximum and minimum gain values of the PDG medium. Since the maximum gain is limited by pump depletion, SBS polarization pulling of probe waves of non-negligible power levels would be restricted.

In this work, we proposed, analyze and demonstrate an enhanced technique for SBS polarization pulling, based on two orthogonally polarized pumps that are separated in frequency by twice the Brillouin shift. Dual pump configurations had been used previously for extending the usable bandwidth of SBS-induced slow light setups[7]. The SOP of a probe wave, whose frequency is centered between those of the two pumps, is drawn towards the conjugate of the lower-frequency pump. The pulling is strengthened by the higher frequency pump, which repels the probe SOP from the orthogonal state. While the differential gain provided is the same as that induced by a single pump of equal total power, the dual-pump configuration generates a more modest maximal gain, and is therefore less susceptible to depletion. The superior performance is demonstrated experimentally.

21st International Conference on Optical Fiber Sensors, edited by Wojtek J. Bock, Jacques Albert, Xiaoyi Bao,
Proc. of SPIE Vol. 7753, 77532D · © 2011 SPIE · CCC code: 0277-786X/11/$18 · doi: 10.1117/12.885330

2. Analysis and simulations

Let us denote the Jones column vector of an SBS probe wave as $\vec{E}_{sig}(z)$, where z is position coordinate along a fiber of length L. The probe wave enters the fiber at $z = 0$, and it is assumed to be monochromatic with frequency ω_{sig}. Consider first the amplification of the probe by a single pump wave of frequency $\omega_{sig} + \Omega_B$, Ω_B the Brillouin frequency shift of the fiber, that is launched at $z = L$. We denote the pump power and unit Jones vector by $2P$ and $\hat{e}_p^{(1)}(z)$, respectively. Neglecting linear losses over a relatively short L and polarization mode dispersion effects within the spectral range of $\Omega_B \sim 10$ GHz, the propagation equation of $\vec{E}_{sig}(z)$ *in the undepleted pump regime* is given by[5]:

$$\frac{\mathrm{d}\vec{E}_{sig}(z)}{\mathrm{d}z} = \left[\frac{\mathrm{d}\mathbf{T}(z)}{\mathrm{d}z}\mathbf{T}^{\dagger}(z) + \frac{\gamma_0 \cdot 2P}{2}\hat{e}_p^{(1)}(z)\hat{e}_p^{(1)\dagger}(z)\right]\vec{E}_{sig}(z) \ . \tag{1}$$

In (1), $\mathbf{T}(z)$ is the Jones matrix which describes the propagation along the fiber up to point z and γ_0 is the SBS gain coefficient in units of $[\mathrm{W{\cdot}m}]^{-1}$. Note that (1) is linear in the probe wave. Previous analysis of (1) had shown that the maximum and minimum values of the probe power gain, $G^{\max}$ and $G^{\min}$, are associated with a pair of orthogonal SOPs of the probe input[5]. We denote the unit Jones vectors of these two states as $\hat{e}_{sig}^{in\,\max}$ and $\hat{e}_{sig}^{in\,\min}$, respectively. $G^{\max}$ and $G^{\min}$ also correspond to a pair of orthogonal SOPs of the probe output, the Jones vector of which are denoted by $\hat{e}_{sig}^{out\,\max}$ and $\hat{e}_{sig}^{out\,\min}$. For an arbitrarily polarized input probe: $\vec{E}_{sig}(0) = a\hat{e}_{sig}^{in\max} + b\hat{e}_{sig}^{in\min}$, the amplified output can be expressed as:

$$\vec{E}_{sig}(L) = a\sqrt{G^{\max}}\,\hat{e}_{sig}^{out\,\max} + b\sqrt{G^{\min}}\,\hat{e}_{sig}^{out\,\min} \ . \tag{2}$$

Since typically $G^{\max} >> G^{\min}$, the SOP of $\vec{E}_{sig}(L)$ is closely aligned with $\hat{e}_{sig}^{out\,\max}$ unless a is vanishingly small. Equation (2) therefore describes *polarization pulling* of the output probe wave towards a particular state, which is decided by the pump polarization. The effectiveness of the pulling is determined by the ratio $G^{\max}/G^{\min}$. For standard fibers that are weakly and randomly birefringent[5], $G^{\max} = \exp\left(\frac{2}{3}\gamma_0 L \cdot 2P\right)$, $G^{\min} = \exp\left(\frac{1}{3}\gamma_0 L \cdot 2P\right)$ and $\hat{e}_{sig}^{out\,\max} = \hat{e}_p^{(1)*}(0)$.

Consider next the proposition of this paper, namely: a dual-pump scenario. Here, an amplifying pump of frequency $\omega_{sig} + \Omega_B$ and input unit Jones vector $\hat{e}_p^{(1)}(L)$, and an attenuating pump of frequency $\omega_{sig} - \Omega_B$ and an orthogonal launch polarization: $\hat{e}_p^{(2)}(L) \perp \hat{e}_p^{(1)}(L)$. The two pumps are of equal power P. The probe propagation equation is now:

$$\frac{\mathrm{d}\vec{E}_{sig}(z)}{\mathrm{d}z} = \left[\frac{\mathrm{d}\mathbf{T}(z)}{\mathrm{d}z}\mathbf{T}^{\dagger}(z) + \frac{\gamma_0 \cdot P}{2}\hat{e}_p^{(1)}(z)\hat{e}_p^{(1)\dagger}(z) - \frac{\gamma_0 \cdot P}{2}\hat{e}_p^{(2)}(z)\hat{e}_p^{(2)\dagger}(z)\right]\vec{E}_{sig}(z) \ . \tag{3}$$

Note that the effects of the amplifying and attenuating pumps do not cancel out, due to their orthogonal SOPs.

Figure 1 shows the calculated SOPs of $\vec{E}_{sig}(L)$, which correspond to 200 arbitrary input probe SOPs. The left-hand panel shows the input SOPs on the Poincare sphere, whereas the center and right-hand panels show the calculated output SOPs using equations (1) and (3) respectively. The results show that the two pump configurations provide equivalent polarization pulling. This equivalence is restricted, however, to the undepleted pump regime. Pump depletion limits $G^{\max}$ but does not effect $G^{\min}$, and therefore hinders probe polarization pulling. The onset of depletion occurs when the input probe power P_{sig}, multiplied by the small signal $G^{\max}$, is on the order of the pump power[1]. Since the dual pump configuration is characterized by a more modest $G^{\max}$, it is expected to withstand higher pump powers P for a given P_{sig} without reaching depletion. Polarization pulling with dual pumps is therefore more effective.

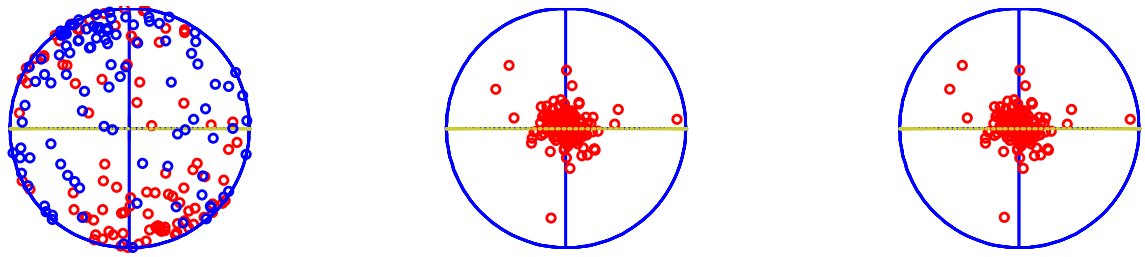

Fig. 1: Input arbitrary probe SOPs (left). Simulated output probe SOPs for a single amplifying pump (center), and for orthogonal gain and loss pumps (right), in the undepleted pump regime. Simulation parameters: L = 2 km, P = 25 mW, $\gamma_0 = 0.18\ [\mathrm{W \cdot m}]^{-1}$.

3. Experimental setup and results

Polarization pulling with one and two pumps was examined experimentally. The measurement setup is shown in Fig. 2. Light from a distributed feedback laser diode (DFB-LD) with frequency ω_{sig} is amplified by an erbium-doped fiber amplifier (EDFA) and split in two paths. Light in the upper arm is modulated by a Mach-Zehnder electro-optic modulator (EOM), which is driven by a sine wave of frequency Ω_B and biased to suppress the carrier wave. The dual-sideband modulated waveform is split into two branches yet again. In each branch one of the sidebands $\omega_{sig} \pm \Omega_B$ is selected using a narrowband fiber Bragg grating (FBG) filter. The sideband power is controlled with a variable optical attenuator, and its input polarization (IP) is adjusted to one of two orthogonal states. The two orthogonally polarized sidebands are combined by a polarization beam combiner (PBC), and launched into the fiber under test (FUT) as dual orthogonal pump waves: an amplifying one ($\omega_{sig} + \Omega_B$) and an attenuating one ($\omega_{sig} - \Omega_B$). Light in the lower arm is launched into the FUT as an SBS probe wave. The probe is modulated by a 1 kHz tone to allow for its lock-in detection, and its SOP is adjusted by a digital polarization controller. The output probe power and SOP are measured using a fast polarization analyzer.

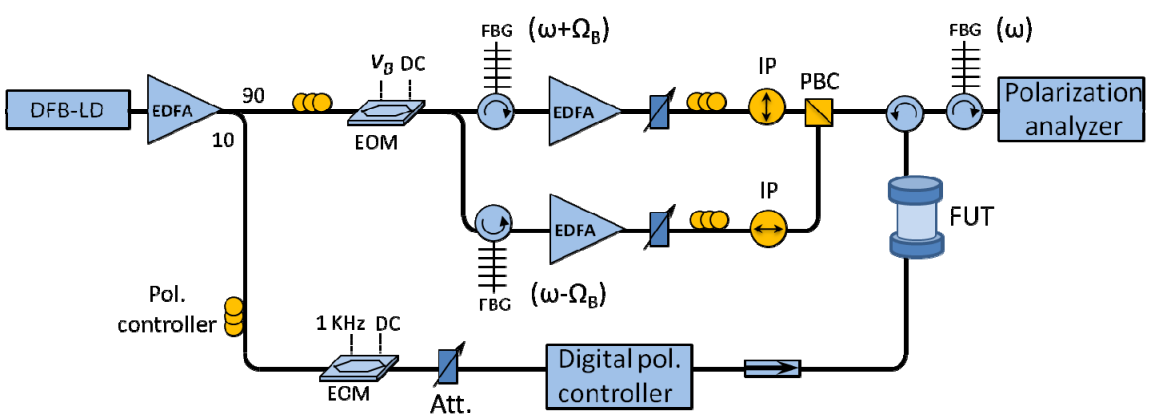

Fig. 2: Experimental setup for SBS polarization pulling with two orthogonal pumps

Figure 3 shows the measured $G^{\max}$ as a function of pump power, for a single amplifying pump and for the dual orthogonal pump configuration. The probe input power was -15 dBm. As expected, the threshold of depletion with a single amplifying pump (~ 11.5 dBm) is lower than that of the dual pump configuration (~ 15 dBm). Polarization pulling was quantified by launching 20 different probe SOPs which span the Poincare sphere (see Fig. 4a). The corresponding output SOPs for P = 11 dBm are shown in panels 4b and 4c for single and dual pumps, respectively. A similar extent of polarization pulling is evident in both figures, as expected in the undepleted pump regime. Figures 4d and 4e show the output probe SOP for P = 14 dBm. Here, depletion of the single amplifying pump restricts the probe polarization pulling, whereas the 20 output SOPs in the dual pump configuration form a cluster that is tightly packed. The experimental results therefore agree with the analysis of section 2.

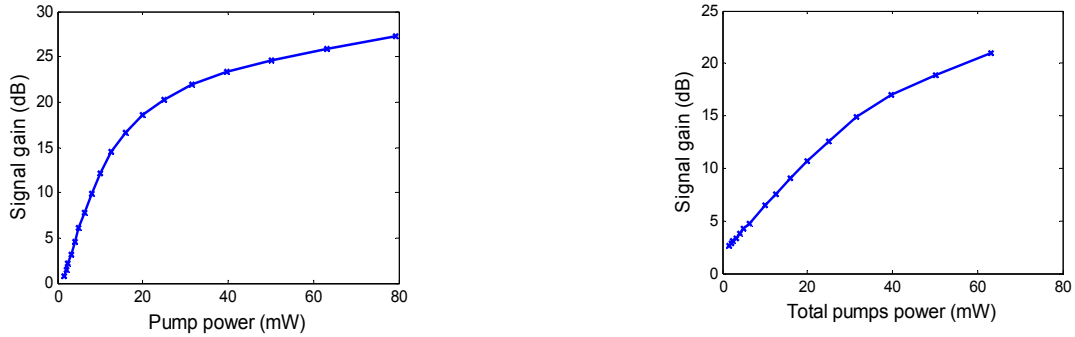

Fig. 3: Measured maximum probe power gain $G^{\max}$ as a function of pump power for a single amplifying pump (left), and dual orthogonal pumps (right).

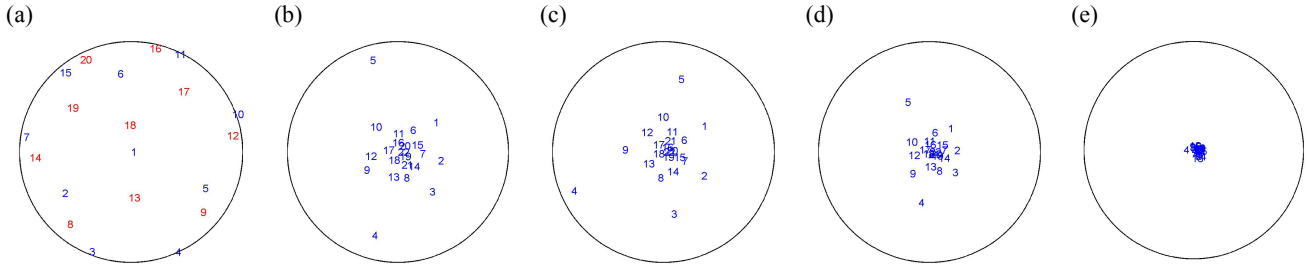

Fig. 4: 20 input probe SOPs (a). Corresponding measured output SOPs for single pump (b) and dual pumps (c) below depletion threshold, P = 11 dBm. Corresponding output SOPs for single pump (d) and dual pumps (e) above depletion threshold, P = 14 dBm.

4. Conclusions

A novel architecture for SBS-based all-optical polarization pulling has been proposed and demonstrated, in both simulations and experiments. The technique relies on two orthogonally polarized SBS pump waves: one pump amplifies the signal wave, whereas the other attenuates it. In the undepleted pump regime, the extent of polarization pulling provided by the dual pumps is equivalent to that of a single pump of equal total power. However, the dual pumps method is more tolerant to depletion, offering more robust polarization pulling for fiber-optic applications involving interference as in interferometric sensors and coherent communications.

References

[1]. Agrawal, G. P., *Nonlinear Fiber Optics,* 3rd Edition, Academic Press, Chapter 6, 2001.

[2]. Pitois, S., Fatome, J., and Millot, G., "Polarization attraction using counterpropagating waves in optical fiber at telecommunication wavelengths," Opt. Express 16(9), 6646-6651 (2008)

[3]. Fatome, J., Pitois, S., Morin, P., and Millot, G., "Observation of light-by-light polarization control and stabilization in optical fibre for telecommunication applications," Opt. Express 18(15), 15311-15317 (2010)

[4]. Martinelli, M., Cirigliano, M., Ferrario, M., Marazzi, L., amd Martelli, P., "Evidence of Raman-induced polarization pulling," Opt. Express 17(2), 947-955 (2009).

[5]. Zadok, A., Zilka, E., Eyal, A., Thevenaz, L. and Tur, M., "Vector analysis of stimulated Brillouin scattering amplification in standard single-mode fibers," Opt. Express 16(26), 21692-21707 (2008).

[6]. Ursini, L., Santagiustina, M., and Palmieri, L., "Polarization-Dependent Brillouin Gain in Randomly Birefringent Fibers," IEEE Photon. Technol. Lett. 22(10), 712-714 (2010)

[7]. Song, K.-Y., and Hotate, K., "25 GHz bandwidth Brillouin slow light in optical fibers," Opt. Lett. 32(3), 217-219 (2007).